DTU · MECHANICAL ENGINEERING · REVISION BOOK

Design of Machine Elements Previous-year questions, solved

Every DME / Machine Design question from the papers in your Drive folder, grouped by topic and solved step by step in the way the end-sem expects, with labelled sketches.

Papers covered	12 papers from 2019 to 2024: ME304, ME305, ME-313, ME262, AE302, AE-311 and CME-403 (end-sem and mid-sem)
Questions	About 75 questions. Repeats are merged and the variants are solved alongside.
Method	V. B. Bhandari, *Design of Machine Elements* (the syllabus textbook), with PSG / DDHB data where a handbook value is needed
Syllabus map	ME301 DME-I: Units 1–6 → Chapters 1–9. Gears, clutches and brakes (Ch 10–11) appear in the 6th-sem ME304/AE302 papers.

Original scans of every paper are reproduced in the Appendix. Where a question leaves data out, the value assumed is marked **Assumed** in the solution.

Contents

1	Design fundamentals, materials, limits, fits and tolerances	Unit 1
2	Static strength: theories of failure, stress concentration, thin cylinders	Unit 2
3	Fatigue and fluctuating loads	Unit 2
4	Cotter and knuckle joints	Unit 3
5	Riveted and welded joints	Units 3, 6
6	Threaded fasteners and power screws	Unit 3
7	Springs	Unit 4
8	Shafts and keys	Unit 5
9	Couplings	Unit 5
10	Gears (spur and helical)	6th-sem papers
11	Clutches and brakes	6th-sem papers
A	Original question papers (scans)	Appendix

What gets asked again and again

Question type	Times set	Where
Socket-and-spigot cotter joint (80–100 kN)	5	Q 4.2, 4.3
Boiler butt joint: triple riveted, double strap	7	Q 5.1–5.3
Flange coupling, rigid or bush-pin	7	Q 9.1–9.5
Screw jack: screw and nut design	4	Q 6.3–6.5
Spur gear design: Lewis + Buckingham	8	Q 10.1–10.7
Shaft under combined bending and torsion	8	Q 8.4–8.9
Helical spring design	5	Q 7.3–7.6
Goodman / Soderberg / Gerber (theory)	5	Q 3.3
Types of fits; hollow vs solid shaft (2-markers)	3 + 3	Q 1.4, 8.1

Papers in this book

Paper	Exam	Format	Label used in book
ME304 Design of Machine Elements	End-sem, May 2023	40 marks · any 5 of 7 · **no DDHB**	ME304 End-sem May 2023
ME304 Design of Machine Elements	End-sem, May 2024	40 marks · any 5 of 7 · DDHB	ME304 End-sem May 2024
ME-304 Design of Machine Elements	Mid-sem, 13 Mar 2024	20 marks · all 4	ME-304 Mid-sem Mar 2024
ME305 Design of Machine Elements	Mid-sem, Sept 2019	30 marks · all · DDHB	ME305 Mid-sem Sep 2019
AE302 Design of Machine Elements	End-sem, May 2023	40 marks · any 5 of 6 · DDHB	AE302 May 2023
AE302 Design of Machine Elements	End-sem, May 2024	40 marks · any 5 of 6 · DDHB	AE302 May 2024
AE-311 Design of Machine Elements	End-sem, July 2021	70 marks · any 5 of 6	AE-311 Jul 2021
ME262 Machine Design	End-sem, May/June 2019	40 marks · any 5 · DDHB	ME262 May/June 2019
ME262 Machine Design	End-sem, May 2023	40 marks · any 5 of 6 · DDHB	ME262 May 2023
ME-313 Machine Design-I	End-sem, May 2019	70 marks · any 5 of 7 · DDHB	ME-313 May 2019
ME-313 Machine Design-I	End-sem, second sitting (year not on scan)	70 marks · any 5 of 7 · DDHB	ME-313 (2nd paper)
CME-403 Machine Design	End-sem, Nov 2024	40 marks · any 5 of 7 · DDHB	CME-403 Nov 2024

What was searched. All 31 pages of *PYQs.pdf*, the 24 photos and 4 screenshots, and the three university compilations (May 2023, May 2024 and Nov–Dec 2024; about 1,800 scanned pages, read with OCR where there was no text layer). *PYQs.pdf* contains Fluid Systems, Dynamics of Machines, Management and CFD papers but no DME paper. The new-scheme ME301 (DME-I) has no paper yet; in Nov 2024 the code ME301 was Fluid Systems under the old scheme. PE305 *Advanced Machine Design* (Nov 2024) is a different course and is left out.

How to use this book. Each question shows every sitting it came from, so you can see what repeats. Read the *Key formulas* box at the start of each chapter first, then attempt the question before reading the solution. In the exam, always draw the sketch: examiners give marks for it.

1 Design fundamentals, materials, limits, fits and tolerances

Short theory questions (2–4 marks) on design requirements, material selection, preferred numbers and fits come up in almost every paper. The mid-sems add a numerical on preferred speeds or on IS fits.

KEY FORMULAS

- Renard series ratio: R5 $= 10^{1/5} = 1.58$, R10 $= 10^{1/10} = 1.26$, R20 $= 1.12$, R40 $= 1.06$, R80 $= 1.03$
- Ratio for n speeds from N_1 to N_n: $\phi = (N_n/N_1)^{1/(n-1)}$
- Geometric mean of diameter step: $D = \sqrt{D_1 D_2}$; tolerance unit $i = 0.45\sqrt[3]{D} + 0.001D\ \mu\text{m}$
- IT6 $= 10i$, IT7 $= 16i$, IT8 $= 25i$, IT11 $= 100i$
- Hole H: $EI = 0$, $ES = +\text{IT}$. Shaft above zero line (k...zc): $ei =$ FD, $es = ei + \text{IT}$. Shaft below (a... h): $es =$ FD, $ei = es - \text{IT}$
- Max clearance $=$ hole max $-$ shaft min; min clearance $=$ hole min $-$ shaft max (negative means interference)

Design requirements and materials

Q 1.1 AE302 May 2024 Q1(a) — 4 marks

What are the basic requirements for designing machine elements?

SOLUTION

A machine element must do its job for its intended life at minimum cost. Bhandari lists these basic requirements:

1. **Strength.** The part must not fail (fracture or yield) under the static, fatigue or impact loads it carries, with an adequate factor of safety.
2. **Rigidity.** Deflection must stay within limits. Shafts, machine-tool beds and gear housings are often designed for stiffness, not strength.
3. **Wear resistance.** Surfaces that slide or roll (gears, cams, bearings, guideways) must keep their shape and accuracy for the design life.
4. **Minimum dimensions and weight.** Less material means lower cost and lower inertia forces.
5. **Manufacturability.** Simple shapes, standard materials and generous tolerances where they are allowed, so the part is cheap to cast, forge or machine.
6. **Safety.** The part must not endanger the operator: guards over couplings and belts, no sharp projections, fail-safe behaviour.
7. **Conformance to standards.** Use standard sizes, materials and fits (BIS/ISO) so parts are interchangeable and spares are available.
8. **Reliability.** A high probability that the part will perform without failure for its rated life.
9. **Maintainability.** Easy to inspect, lubricate, adjust and replace.
0. **Minimum life-cycle cost.** Initial cost plus running, maintenance and disposal cost should be a minimum.

Q 1.2 CME-403 Nov 2024 Q1(a) — 2 marks

What are the factors that govern selection of materials while designing a machine component?

SOLUTION

- **Availability:** the material should be readily available in the required form (bar, plate, casting) and quantity.
- **Cost:** the cost of the raw material plus the cost of processing it into the part.
- **Mechanical properties** required by the service: strength (static and fatigue), stiffness (E), hardness and wear resistance, toughness and impact strength, ductility, creep strength.
- **Manufacturing considerations:** castability, forgeability, machinability, weldability and response to heat treatment.
- **Service conditions:** working temperature, corrosive environment, friction requirements, weight limits and appearance.

Example: a crankshaft needs high fatigue strength and toughness, so a forged alloy steel is used. A machine bed needs damping and compressive strength and has a complex shape, so grey cast iron is used.

Q 1.3 CME-403 Nov 2024 Q1(b) · AE-311 Jul 2021 Q1(a) — 2 + 6 marks

Define preferred numbers. *Numerical:* It is required to standardise 11 speeds from 72 rpm to 720 rpm for a machine tool. Specify the speeds.

SOLUTION

Preferred numbers

Preferred numbers are conventionally rounded terms of geometric progressions (Renard series, IS 1076). Each series covers one decade (1 to 10) in a fixed number of steps, so the ratio of any term to the one before it is constant. They are used to choose sizes, capacities and speeds, so that a product range covers its field with the fewest sizes and the steps between them are even.

Series	Ratio ϕ	Terms in one decade
R5	$\sqrt[5]{10} = 1.58$	1, 1.6, 2.5, 4, 6.3, 10
R10	$\sqrt[10]{10} = 1.26$	1, 1.25, 1.6, 2, 2.5, 3.15, 4, 5, 6.3, 8, 10
R20	$\sqrt[20]{10} = 1.12$	1, 1.12, 1.25, 1.4, 1.6, 1.8, 2, 2.24, ...
R40	$\sqrt[40]{10} = 1.06$	1, 1.06, 1.12, 1.18, 1.25, ...

Derived series take every p-th term of a basic series; for example R10/3 is 1, 2, 4, 8, ...

1. Ratio of the speed series

Eleven speeds give ten steps between 72 and 720 rpm:

$$\phi^{10} = \frac{720}{72} = 10 \;\Rightarrow\; \phi = 10^{1/10} = 1.2589$$

This is the ratio of the **R10 series**. The speeds are 72 rpm multiplied by the R10 numbers.

2. Standard speeds

Step	R10 term	$72\times$ term (rpm)	Exact $72\phi^n$ (rpm)	Speed adopted (rpm)
1	1.00	72.0	72.0	72
2	1.25	90.0	90.6	90
3	1.60	115.2	114.1	115
4	2.00	144.0	143.7	144
5	2.50	180.0	180.9	180
6	3.15	226.8	227.7	227
7	4.00	288.0	286.6	288
8	5.00	360.0	360.9	360
9	6.30	453.6	454.3	454
10	8.00	576.0	571.9	576
11	10.00	720.0	720.0	720

Answer. $\phi = 1.26$ (R10 series). Speeds: 72, 90, 115, 144, 180, 227, 288, 360, 454, 576, 720 rpm.

Exam tip First check whether ϕ matches a basic series: $10^{1/5}$, $10^{1/10}$, $10^{1/20}$ or $10^{1/40}$. If it doesn't, look for a derived series such as R20/3 ($\phi = 1.41$). Then multiply the first speed by the preferred numbers instead of the exact powers of ϕ.

Limits, fits and tolerances

Q 1.4 ME304 End-sem May 2023 Q1(a) · ME262 May/June 2019 Q1(a) · AE302 May 2023 Q1(b) 2–4 marks

Explain the following types of fits, with examples: (i) clearance fit (ii) transition fit (iii) interference fit. (AE302: "Explain the different types of fits with the help of neat sketches.")

SOLUTION

A **fit** is the relationship between a hole and a shaft that are assembled together. It depends on how their tolerance zones lie relative to each other.

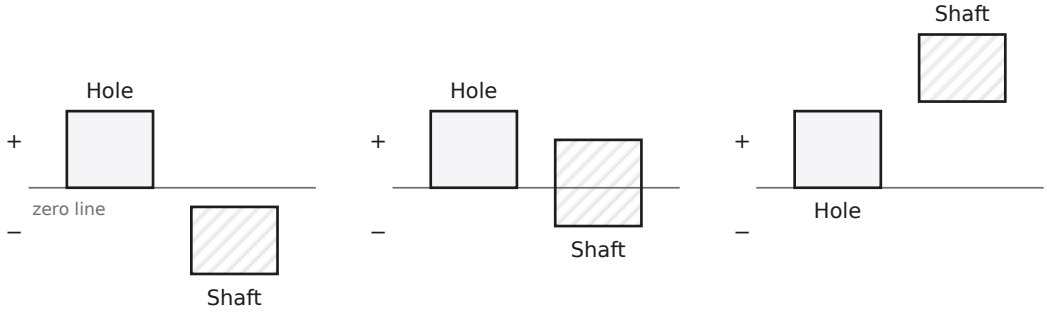

Fig. 1.1 Tolerance zones of hole (plain) and shaft (hatched) relative to the zero line (basic size), hole-basis system

1. **Clearance fit:** the shaft zone lies wholly below the hole zone, so there is always a positive clearance. Minimum clearance $=$ hole min $-$ shaft max > 0. Used where parts slide or rotate relative to each other: journal in a bearing, pulley running loose on a shaft, piston in a cylinder. Examples: H7/g6 (sliding), H8/f7 (running), H11/c11 (loose running).

2. **Transition fit:** the zones overlap, so an assembly may have a small clearance or a small interference depending on the actual sizes. Used for accurate location where the parts must still be assembled or dismantled by hand or with a light mallet: gears and pulleys keyed to shafts, spigots of couplings, ball-bearing inner races. Examples: H7/k6, H7/n6.
3. **Interference fit:** the shaft zone lies wholly above the hole zone, so the shaft is always bigger than the hole. Minimum interference $=$ shaft min $-$ hole max > 0. The parts are pressed or shrunk together and transmit torque by friction: bronze crown on a worm-wheel hub, railway wheel tyre, flywheel or gear permanently on a shaft. Examples: H7/p6 (press), H7/s6, H7/u6 (shrink or drive).

Q 1.5 ME262 May 2023 Q1(b) · CME-403 Nov 2024 Q1(c) 2–4 marks

Explain the unilateral and bilateral systems of tolerance. (CME-403: "What are unilateral and bilateral tolerances?")

SOLUTION

Tolerance is the difference between the upper and lower limits of a dimension, i.e. the permitted variation from the basic size.

- **Unilateral tolerance:** the total tolerance lies on *one side* of the basic size, either wholly above or wholly below it. Examples: $50^{+0.04}_{+0.00}$, $50^{+0.00}_{-0.04}$. This is the system used in the ISO/BIS system of limits and fits (the H hole is $0/+\mathrm{IT}$, the h shaft is $-\mathrm{IT}/0$), because the tolerance can be changed without altering the fit.
- **Bilateral tolerance:** the dimension may vary on *both sides* of the basic size. Examples: 50 ± 0.02, $50^{+0.03}_{-0.01}$. Used for dimensions such as centre distances and the positions of holes, where the variation can naturally go either way.

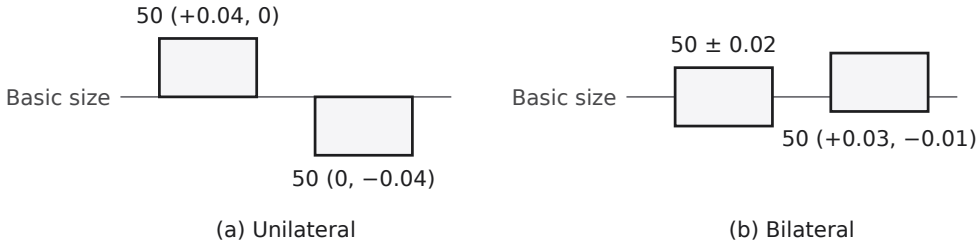

(a) Unilateral (b) Bilateral

Fig. 1.2 Tolerance zone (shaded) relative to the basic size

Q 1.6 ME305 Mid-sem Sep 2019 Q1(e) 2 marks

Differentiate hole basis system and shaft basis system. Explain the type of fit with applications: (i) 50H11d8 (ii) 40H7u6.

SOLUTION

Hole basis system	Shaft basis system
The hole is the basic member. Its lower deviation is zero (H hole).	The shaft is the basic member. Its upper deviation is zero (h shaft).
Different fits are obtained by varying the shaft limits (a…zc).	Different fits are obtained by varying the hole limits (A…ZC).
Preferred in general engineering: shafts are easy to turn or grind to any size, while holes are made with fixed-size reamers and checked with plug gauges.	Used where one shaft of uniform size carries several parts with different fits, e.g. drawn bright bars, line shafts, piston pins.

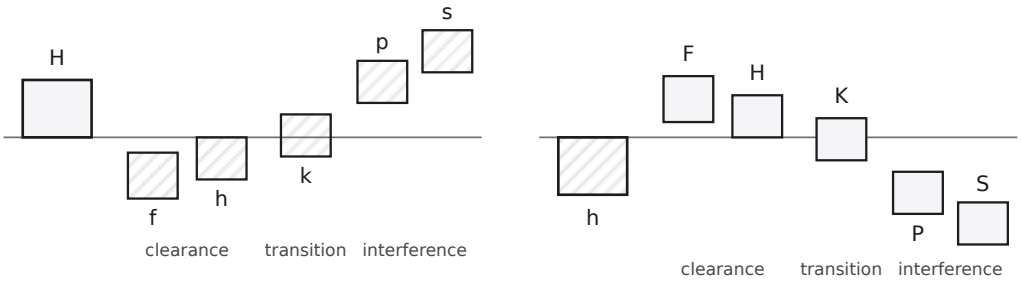

(a) Hole basis: H hole fixed

(b) Shaft basis: h shaft fixed

Fig. 1.3 Hole-basis and shaft-basis systems (holes plain, shafts hatched)

Assumed Limits from the IS 919 tables: IT11 = 160 µm, IT8 = 39 µm, IT7 = 25 µm, IT6 = 16 µm for the 30–50 mm step; fundamental deviation of d (30–50) = −80 µm; of u (30–40) = +60 µm.

Fit	Hole limits (mm)	Shaft limits (mm)	Clearance / interference	Type
50H11/d8	50.000 / 50.160	49.920 / 49.881	clearance 0.080 to 0.279	Clearance (loose running)
40H7/u6	40.000 / 40.025	40.060 / 40.076	interference 0.035 to 0.076	Interference (heavy drive / shrink)

- **50H11d8**, hole-basis clearance fit with a large clearance. The coarse H11 hole is cheap to make. Applications: loose pulleys and idler gears, plummer-block bearings in agricultural and earth-moving machinery, crane and hoist bearings, where accuracy is unimportant and dirt or thermal expansion needs room.
- **40H7u6**, hole-basis heavy interference (drive or shrink) fit. It needs a press or heating the hub to assemble. Applications: permanent assemblies that carry torque by friction alone, such as gears and couplings shrunk on shafts, bronze crowns on worm-wheel hubs and wheel tyres on centres.

Q 1.7 ME-304 Mid-sem Mar 2024 Q3 — 5 marks

A fork of universal coupling is to be assembled with a gear shaft of diameter 50 mm providing a fit 50H8f8 and constrained with a keyed joint between the shaft and the coupling with a fit of 16H7n6. The fundamental deviations for the f and n type shafts are $f = -5.5D^{0.41}$ µm and $n = +5D^{0.34}$ µm respectively. The values of tolerance may be computed from $i = 0.45\sqrt[3]{D} + 0.001D$ µm and the multiplier for quality IT6, IT7 and IT8 are 10, 16 and 25 respectively. Determine the sizes & tolerances and indicate the type of fit for the assembly.

SOLUTION

Assumed IS 919 diameter steps: 50 mm lies in the 30–50 mm step and 16 mm in the 10–18 mm step. D is the geometric mean of the step limits.

1. Fit 50H8f8 (coupling bore on the gear shaft)

$$D = \sqrt{30 \times 50} = 38.73 \text{ mm}, \qquad i = 0.45\sqrt[3]{38.73} + 0.001(38.73) = 1.561 \ \mu\text{m}$$

$$\text{IT8} = 25i = 39.03 \approx 39 \ \mu\text{m}$$

Hole 50H8: $EI = 0$, $ES = +39 \ \mu\text{m}$.

Shaft 50f8: upper deviation $es = -5.5(38.73)^{0.41} = -24.63 \approx -25 \ \mu\text{m}$, lower deviation $ei = es - \text{IT8} = -24.63 - 39.03 = -63.66 \approx -64 \ \mu\text{m}$.

$$\text{Hole: } 50.000 \text{ to } 50.039 \text{ mm} \qquad \text{Shaft: } 49.975 \text{ to } 49.936 \text{ mm}$$

$$C_{\max} = 50.039 - 49.936 = 0.103 \text{ mm} \qquad C_{\min} = 50.000 - 49.975 = 0.025 \text{ mm}$$

Both clearances are positive, so this is a **clearance fit** (running fit). The fork can be slid onto the gear shaft and the key carries the torque.

2. Fit 16H7n6 (key in the keyway)

$$D = \sqrt{10 \times 18} = 13.42 \text{ mm}, \qquad i = 0.45\sqrt[3]{13.42} + 0.001(13.42) = 1.083 \ \mu\text{m}$$

$$\text{IT7} = 16i = 17.32 \approx 17 \ \mu\text{m}, \qquad \text{IT6} = 10i = 10.83 \approx 11 \ \mu\text{m}$$

Hole 16H7: $EI = 0$, $ES = +17 \ \mu\text{m}$.
Shaft 16n6: lower deviation $ei = +5(13.42)^{0.34} = +12.09 \approx +12 \ \mu\text{m}$, upper deviation $es = ei + \text{IT6} = 12.09 + 10.83 = 22.92 \approx +23 \ \mu\text{m}$.

$$\text{Hole: } 16.000 \text{ to } 16.017 \text{ mm} \qquad \text{Shaft: } 16.012 \text{ to } 16.023 \text{ mm}$$
$$I_{\max} = 16.023 - 16.000 = 0.023 \text{ mm} \qquad C_{\max} = 16.017 - 16.012 = 0.005 \text{ mm}$$

Depending on the actual sizes, an assembly can have up to 0.005 mm clearance or up to 0.023 mm interference, so this is a **transition fit**. That suits a key: it locates accurately and needs only light pressing to assemble.

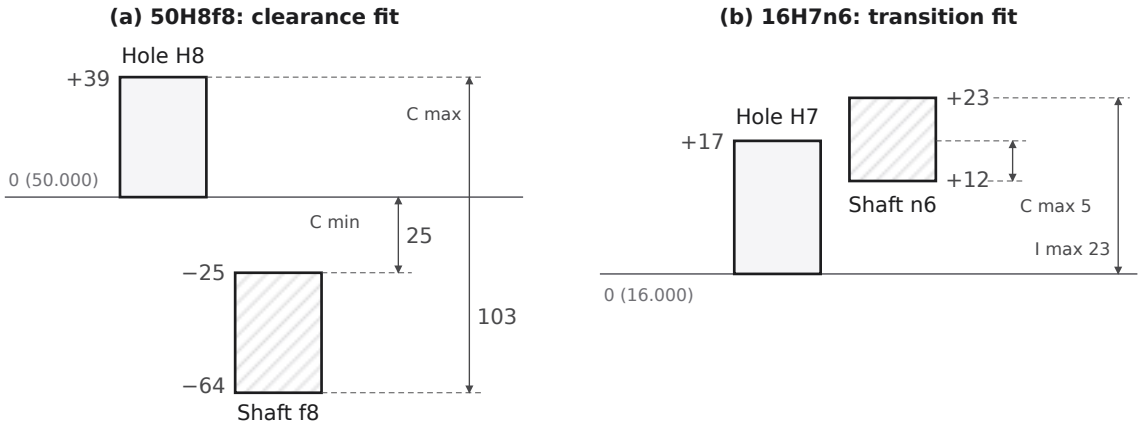

Fig. 1.4 Tolerance zones for Q 1.7 (deviations in μm from the basic size; hole plain, shaft hatched; vertical scales differ)

Answer. **50H8f8**: hole $50^{+0.039}_{0}$, shaft $50^{-0.025}_{-0.064}$; clearance 0.025 to 0.103 mm, so a **clearance (running) fit**.
16H7n6: hole $16^{+0.017}_{0}$, shaft $16^{+0.023}_{+0.012}$; between 0.005 mm clearance and 0.023 mm interference, so a **transition fit**.

Exam tip The given FD formula is the deviation *nearest the zero line*: for f (below the line) that is the upper deviation es; for n (above the line) it is the lower deviation ei. Getting this the wrong way round is the usual mistake.

2 Static strength: theories of failure, stress concentration, thin cylinders

Expect a 2-mark FOS calculation on a stress element or a thin pressure vessel in nearly every paper, a longer combined-loading problem in the mid-sems, and a theory question on stress concentration (asked in five papers).

KEY FORMULAS

- Principal stresses: $\sigma_{1,2} = \dfrac{\sigma_x + \sigma_y}{2} \pm \sqrt{\left(\dfrac{\sigma_x - \sigma_y}{2}\right)^2 + \tau_{xy}^2}$
- Max principal stress (Rankine): $\sigma_1 = S_{ut}/N$ (brittle) or S_{yt}/N
- Max shear stress (Tresca): $\tau_{\max} = \dfrac{\sigma_{\max} - \sigma_{\min}}{2} = \dfrac{S_{yt}}{2N}$, using all three principal stresses (include $\sigma_3 = 0$ for plane stress)
- Distortion energy (von Mises): $\sigma_e = \sqrt{\sigma_1^2 - \sigma_1\sigma_2 + \sigma_2^2} = \sqrt{\sigma_x^2 - \sigma_x\sigma_y + \sigma_y^2 + 3\tau_{xy}^2} = S_{yt}/N$; $S_{sy} = 0.577 S_{yt}$
- Thin cylinder (closed ends): hoop $\sigma_t = \dfrac{pD}{2t}$, longitudinal $\sigma_l = \dfrac{pD}{4t}$, radial $\sigma_r \approx 0$ (or $-p$ at the inner surface)
- Combined M and T on a circular section, with $k = d_i/d_o$: $\sigma_1 = \dfrac{32 M_e}{\pi d_o^3 (1 - k^4)}$, $M_e = \frac{1}{2}\left(M + \sqrt{M^2 + T^2}\right)$; $\tau_{\max} = \dfrac{16 T_e}{\pi d_o^3 (1 - k^4)}$, $T_e = \sqrt{M^2 + T^2}$
- Stress concentration: $K_t = \sigma_{\max}/\sigma_0$; elliptical hole $K_t = 1 + 2a/b$; $q = \dfrac{K_f - 1}{K_t - 1}$

Theories of failure

Q 2.1 ME262 May/June 2019 Q1(b) — 2 marks

Explain distortion energy theory in design of a machine component. Why is this theory preferred in design?

SOLUTION

Statement (von Mises–Hencky). Failure (yielding) occurs when the strain energy of distortion per unit volume at a point equals the strain energy of distortion per unit volume at yield in a simple tension test.

The total strain energy splits into a part that changes volume (due to the mean, hydrostatic stress) and a part that changes shape (distortion). Only the distortion part causes yielding:

$$u_d = \frac{1+\nu}{6E}\left[(\sigma_1 - \sigma_2)^2 + (\sigma_2 - \sigma_3)^2 + (\sigma_3 - \sigma_1)^2\right], \qquad u_{d,\,\text{tension test}} = \frac{1+\nu}{3E} S_{yt}^2$$

Equating the two gives the design equation:

$$\sqrt{\tfrac{1}{2}\left[(\sigma_1 - \sigma_2)^2 + (\sigma_2 - \sigma_3)^2 + (\sigma_3 - \sigma_1)^2\right]} = \frac{S_{yt}}{N} \quad \xrightarrow{\sigma_3 = 0} \quad \sigma_1^2 - \sigma_1\sigma_2 + \sigma_2^2 = \left(\frac{S_{yt}}{N}\right)^2$$

Why it is preferred for ductile parts:

- It agrees best with test results for ductile materials under combined stresses.
- It predicts $S_{sy} = 0.577 S_{yt}$, which matches torsion tests. MSST gives $0.5 S_{yt}$, up to 15% conservative.
- It correctly predicts that a hydrostatic stress alone does not cause yielding.
- It allows a smaller, lighter part than MSST with no loss of safety, so it is economical.

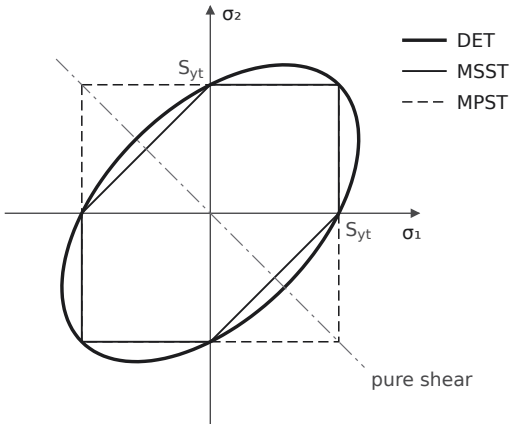

Fig. 2.1 Failure envelopes in the σ₁–σ₂ plane: the DET ellipse passes through the corners of the MSST hexagon and lies outside it

---

Q 2.2 ME305 Mid-sem Sep 2019 Q1(c) — 2 marks

The state of stress at a point in a shaft is given by σ_x, σ_y and τ_{xy} = 81 MPa, 21 MPa and 84 MPa respectively. If the yield strength of the material is 280 MPa determine the FOS by distortion energy theory of failure.

SOLUTION

1. Principal stresses

$$\sigma_{1,2} = \frac{81+21}{2} \pm \sqrt{\left(\frac{81-21}{2}\right)^2 + 84^2} = 51 \pm 89.20 \;\Rightarrow\; \sigma_1 = 140.20 \text{ MPa},\ \sigma_2 = -38.20 \text{ MPa}$$

2. Von Mises stress and FOS

$$\sigma_e = \sqrt{\sigma_1^2 - \sigma_1\sigma_2 + \sigma_2^2} = \sqrt{140.20^2 - (140.20)(-38.20) + 38.20^2} = 162.69 \text{ MPa}$$

Check directly from the components: $\sqrt{81^2 - 81(21) + 21^2 + 3(84)^2} = 162.69$ MPa.

$$N = \frac{S_{yt}}{\sigma_e} = \frac{280}{162.69} = 1.72$$

> **Answer.** $\sigma_1 = 140.2$ MPa, $\sigma_2 = -38.2$ MPa, $\sigma_e = 162.7$ MPa, **FOS = 1.72** (DET).

Thin pressure vessels

Q 2.3 ME304 End-sem May 2023 Q1(c) — 2 marks

A thin pressure vessel (radius/thickness = 20) closed at both ends is pressurised to 7 MPa as test pressure. If the yield strength of the material is 450 MPa, determine the factor of safety on the basis of maximum shear stress theory and distortion energy theory.

SOLUTION

Assumed Thin shell: radial stress neglected ($\sigma_3 = \sigma_r \approx 0$).

$$\sigma_t = \frac{pr}{t} = 7(20) = 140 \text{ MPa}, \qquad \sigma_l = \frac{pr}{2t} = 70 \text{ MPa}, \qquad \sigma_r \approx 0$$

1. Maximum shear stress theory

$$\tau_{\max} = \frac{\sigma_1 - \sigma_3}{2} = \frac{140 - 0}{2} = 70 \text{ MPa}, \qquad N = \frac{S_{yt}/2}{\tau_{\max}} = \frac{225}{70} = 3.21$$

2. Distortion energy theory

$$\sigma_e = \sqrt{140^2 - 140(70) + 70^2} = 121.24 \text{ MPa}, \qquad N = \frac{450}{121.24} = 3.71$$

Answer. FOS = **3.21** (MSST), **3.71** (DET).

Exam tip In MSST, $\tau_{\max}$ is $(\sigma_1 - \sigma_3)/2$ with $\sigma_3 = 0$, not $(\sigma_t - \sigma_l)/2$. Using the in-plane value $(140 - 70)/2 = 35$ MPa doubles the FOS and is wrong. If you include $\sigma_r = -p = -7$ MPa at the inner surface, you get 3.06 (MSST) and 3.53 (DET).

Q 2.4 ME304 End-sem May 2023 Q2 — 8 marks

A long thin pressure vessel of AISI1020 (yield stress 350 MPa) with 70 mm internal diameter and 2.5 mm thick is subjected to an internal pressure of 6 MPa. If the cylinder is also subjected to a twisting moment of 70 Nm, determine the factor of safety on the basis of maximum principal stress, maximum shear and distortion energy theory. Which theory of failure is better for this design?

SOLUTION

Assumed Closed ends (pressure causes a longitudinal stress). Radial stress neglected ($\sigma_3 = 0$). Torsional shear taken at the outer surface.

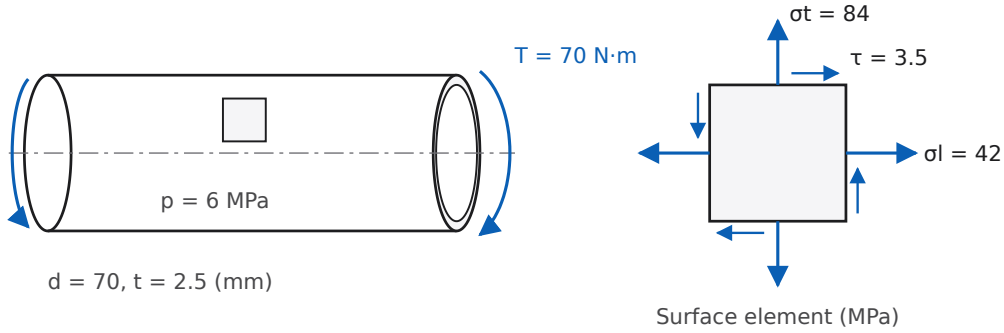

Fig. 2.2 Pressurised thin cylinder under torque (left) and the stresses on an element of its outer surface (right) (hoop direction vertical)

1. Stresses due to pressure

$$\sigma_t = \frac{pd}{2t} = \frac{6(70)}{2(2.5)} = 84 \text{ MPa}, \qquad \sigma_l = \frac{pd}{4t} = 42 \text{ MPa}$$

2. Shear stress due to torque

$d_o = 70 + 2(2.5) = 75$ mm.

$$J = \frac{\pi}{32}(75^4 - 70^4) = 7.491 \times 10^5 \text{ mm}^4, \qquad \tau = \frac{Tr_o}{J} = \frac{70 \times 10^3 (37.5)}{7.491 \times 10^5} = 3.50 \text{ MPa}$$

(The thin-tube formula $\tau = T/(2\pi r_m^2 t)$ gives 3.39 MPa, practically the same.)

3. Principal stresses

$$\sigma_{1,2} = \frac{84 + 42}{2} \pm \sqrt{\left(\frac{84 - 42}{2}\right)^2 + 3.50^2} = 63 \pm 21.29 \;\Rightarrow\; \sigma_1 = 84.29,\ \sigma_2 = 41.71,\ \sigma_3 = 0 \text{ MPa}$$

4. Factors of safety

Theory	Criterion	Equivalent value	FOS
Max principal stress	$\sigma_1 = S_{yt}/N$	$\sigma_1 = 84.29$ MPa	$350/84.29 = \mathbf{4.15}$
Max shear stress	$\frac{\sigma_1-\sigma_3}{2} = \frac{S_{yt}}{2N}$	$\tau_{\max} = 42.15$ MPa	$175/42.15 = \mathbf{4.15}$
Distortion energy	$\sigma_e = S_{yt}/N$	$\sigma_e = \sqrt{84.29^2 - 84.29(41.71) + 41.71^2} = 73.00$ MPa	$350/73.00 = \mathbf{4.79}$

5. Which theory is better?

AISI1020 is a ductile low-carbon steel, so failure is by yielding, which is governed by shear and distortion. The **distortion energy theory** is the best predictor and gives the most economical design (FOS 4.79). MSST is safe but conservative. MPST is meant for brittle materials. It gives the same answer as MSST here only because σ_1 and σ_2 are both tensile and $\sigma_3 = 0$, so the largest Mohr circle is the one through σ_1 and 0.

> **Answer.** $\sigma_1 = 84.29$, $\sigma_2 = 41.71$ MPa. FOS: MPST 4.15, MSST 4.15, DET 4.79. DET is the appropriate theory for this ductile steel vessel.

Q 2.5 ME-304 Mid-sem Mar 2024 Q1 — 5 marks

A long thin walled cylindrical vessel made of AISI1020 (yield strength 300 MPa) with internal diameter of 800 mm with closed ends is subjected to a uniform internal pressure of 2 MPa. Assuming the elastic modulus and Poisson's ratio as 200 GPa and 0.3, determine the thickness of the shell based on maximum shear stress and distortion energy theory of failure.

SOLUTION

Assumed No factor of safety is given; take $N = 2$ on yield. Radial stress neglected (thin shell).

$$\sigma_t = \frac{pD}{2t} = \frac{2(800)}{2t} = \frac{800}{t}, \qquad \sigma_l = \frac{pD}{4t} = \frac{400}{t}, \qquad \sigma_3 = \sigma_r \approx 0$$

1. Maximum shear stress theory

$$\tau_{\max} = \frac{\sigma_t - 0}{2} = \frac{S_{yt}}{2N} \;\Rightarrow\; \frac{800}{t} = \frac{300}{2} \;\Rightarrow\; t = 5.33 \text{ mm} \;\rightarrow\; \mathbf{6\ mm}$$

Check: $\sigma_t = 800/6 = 133.3$ MPa, so $N = 300/133.3 = 2.25$.

2. Distortion energy theory

$$\sigma_e = \sqrt{\sigma_t^2 - \sigma_t\sigma_l + \sigma_l^2} = \frac{\sqrt{3}}{2}\sigma_t = \frac{\sqrt{3}}{2}\cdot\frac{800}{t} = \frac{300}{2} \;\Rightarrow\; t = 4.62 \text{ mm} \;\rightarrow\; \mathbf{5\ mm}$$

Check: $\sigma_t = 160$, $\sigma_l = 80$, $\sigma_e = 138.6$ MPa, so $N = 2.17$.

3. Use of E and ν: expansion of the shell (t = 6 mm)

$$\varepsilon_t = \frac{\sigma_t - \nu\sigma_l}{E} = \frac{133.3 - 0.3(66.7)}{200\times10^3} = 5.67\times10^{-4}, \qquad \delta D = \varepsilon_t D = 0.45 \text{ mm}$$

Longitudinal strain: $\varepsilon_l = (66.7 - 0.3\times133.3)/E = 1.33\times10^{-4}$.

> **Answer** (N = 2). MSST: $t = 5.33$, so use **6 mm**. DET: $t = 4.62$, so use **5 mm**. Increase in diameter at 6 mm thickness: 0.45 mm.

Exam tip If the examiner intends "thickness at the onset of yielding" ($N = 1$), halve the values: 2.67 mm (MSST) and 2.31 mm (DET). Always state the FOS you assume. DET needs about 13% less thickness than MSST, because $\sqrt{3}/2 = 0.866$.

Stress concentration

Q 2.6 ME262 May 2023 Q1(a) · ME304 End-sem May 2023 Q1(d) · ME304 End-sem May 2024 Q1(b) · ME305 Mid-sem Sep 2019 Q1(b) · ME-313 May 2019 Q1(b) · ME-313 (2nd paper) Q1(b) — 2–5 marks

(a) Explain the phenomenon of stress concentration. How is it caused and how can it be reduced? (b) How can localised stresses in a machine component be avoided? Explain with diagrams. (c) What is theoretical and actual stress concentration factor? How does stress concentration vary with orientation of an elliptical hole w.r.t. the applied axial load in a plate of thickness t? (d) Define the term 'stress concentration factor', notch sensitivity and fatigue.

SOLUTION

1. Phenomenon (flow-line analogy)

Stress concentration is the localised rise of stress near a discontinuity (hole, notch, keyway, shoulder or groove) far above the nominal stress given by elementary formulas. It can be pictured by treating the lines of force as the streamlines of a fluid flowing through the part. Where the section changes suddenly, the lines crowd together and the stress peaks at the edge of the discontinuity. It then dies away within a short distance.

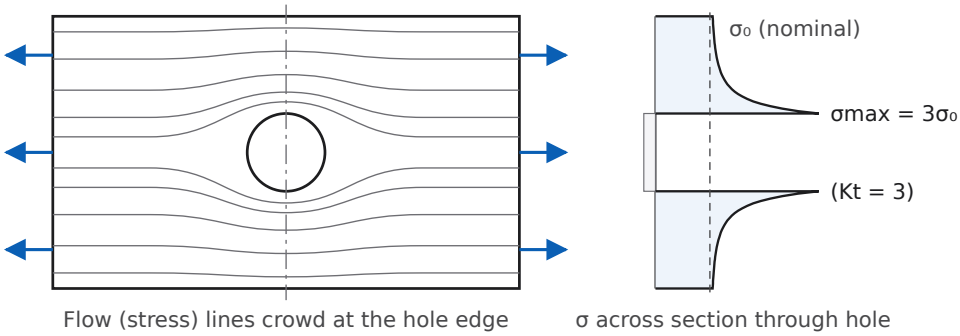

Fig. 2.3 Flow-line analogy for a plate with a central circular hole, and the stress distribution across the section through the hole

Causes:

- Changes of cross-section: shoulders, keyways, splines, grooves, oil holes, screw threads.
- Inhomogeneous material: inclusions, blowholes and cavities in castings, cracks.
- Concentrated loads at small areas of contact: gear teeth, cams, ball bearings.
- Surface roughness and machining scratches, stamp marks, and corrosion pits.

2. Stress concentration factor, notch sensitivity and fatigue

- **Theoretical (geometric) stress concentration factor** $K_t = \dfrac{\sigma_{\max}}{\sigma_0}$ (or $\tau_{\max}/\tau_0$): the peak stress at the discontinuity divided by the nominal stress. It depends only on the geometry and the type of load, not on the material. It is found from elasticity theory, photoelasticity or FEA charts.
- **Actual (fatigue) stress concentration factor** $K_f = \dfrac{\text{endurance limit of notch-free specimen}}{\text{endurance limit of notched specimen}}$. Under fluctuating load the real weakening is less than K_t predicts, because the material is not fully sensitive to the notch. So $1 \le K_f \le K_t$.
- **Notch sensitivity** $q = \dfrac{K_f - 1}{K_t - 1}$, $0 \le q \le 1$, which gives $K_f = 1 + q(K_t - 1)$. It is the susceptibility of a material to a notch: $q \to 0$ for grey cast iron (graphite flakes are already internal notches) and $q \to 1$ for high-strength hardened steels.
- **Fatigue** is the failure of a part under repeated or fluctuating stresses whose maximum is well below S_{ut} (often below S_{yt}), after a number of cycles. A crack starts at a stress raiser, grows slowly with each cycle, and the reduced section then fractures suddenly without visible yielding.

3. Elliptical hole: effect of orientation

For an elliptical hole with semi-axis a *perpendicular* to the load and b *parallel* to it, in a wide plate of thickness t:

$$K_t = 1 + 2\frac{a}{b}$$

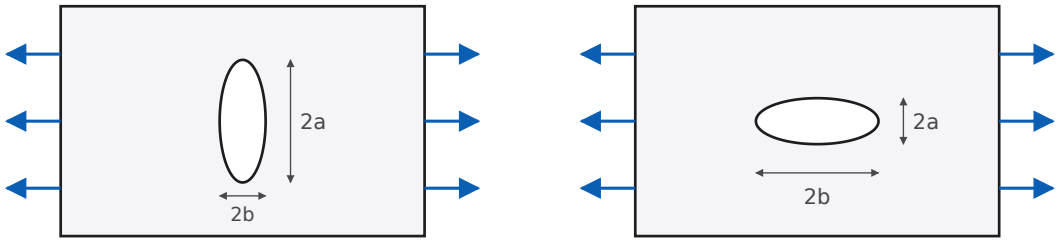

(a) Major axis ⊥ load: a/b = 2.67
Kt = 1 + 2(2.67) = 6.3 (high)

(b) Major axis ∥ load: a/b = 0.375
Kt = 1 + 2(0.375) = 1.75 (low)

Fig. 2.4 The same elliptical hole turned through 90° (axes 64 and 24 units): Kt = 1 + 2a/b, with a the semi-axis perpendicular to the load

- Major axis perpendicular to the load ($a > b$): $K_t > 3$. As $b \to 0$ (a crack normal to the load), $K_t \to \infty$. This is why transverse cracks are so dangerous.
- Circular hole ($a = b$): $K_t = 3$.
- Major axis parallel to the load ($a < b$): K_t falls towards 1. A slot aligned with the load is harmless.
- For a plate of thickness t, the nominal stress is $\sigma_0 = P/(wt)$ and $\sigma_{\max} = K_t\sigma_0$. Thickness changes the nominal stress but not K_t.

4. Methods of reducing (avoiding) localised stresses

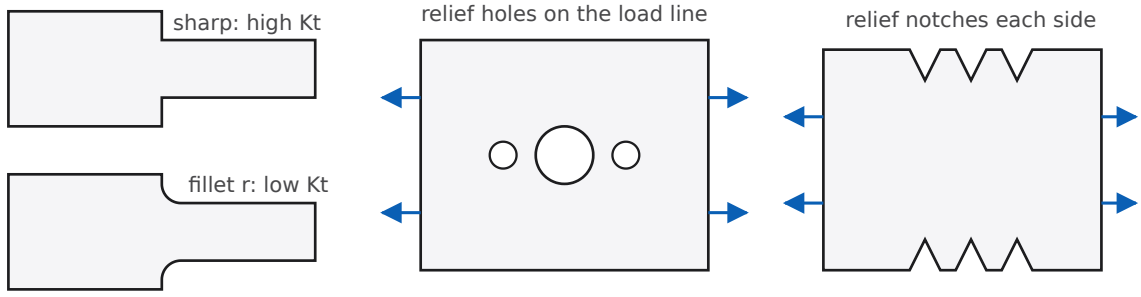

(a) Fillet at shoulder

(b) Auxiliary holes

(c) Multiple notches

Fig. 2.5 Reducing stress concentration: the extra holes and notches smooth the flow lines around the essential one

- Avoid abrupt changes of section. Use generous **fillet radii** at shoulders. Where a bearing needs a sharp shoulder, use an **undercut** or a relief groove behind the shoulder.
- Drill **auxiliary holes** on either side of an essential hole, along the line of the load, so the flow lines bend gradually.
- Use **multiple notches** instead of a single sharp one, and **remove undesired material** (stress-relief grooves) near the stress raiser.
- End keyways with a sled-runner profile instead of a square end. Use rolled threads, and taper the transitions.
- Use a smooth surface finish and avoid stamp marks. Shot-peen or surface-roll to leave residual compressive stress (important in fatigue).
- Place holes and grooves in regions of low stress, and specify sound castings free from blowholes and inclusions.

Exam tip For the 2-mark "avoid localised stresses" version, the examiner wants three or four of the sketches in Fig. 2.5, each with one line of explanation. The flow-line idea explains why each one works.

Combined bending and torsion

Q 2.7 ME305 Mid-sem Sep 2019 Q3 10 marks

Select a suitable material for a crank lever subjected to the various loads as shown in Figure 1.0 with proper reasoning. Also determine a suitable diameter of the critical section on the lever assuming a FOS of 2.5 on tensile strength and a ratio of outside to inside diameter of 2. All dimensions in mm.

SOLUTION

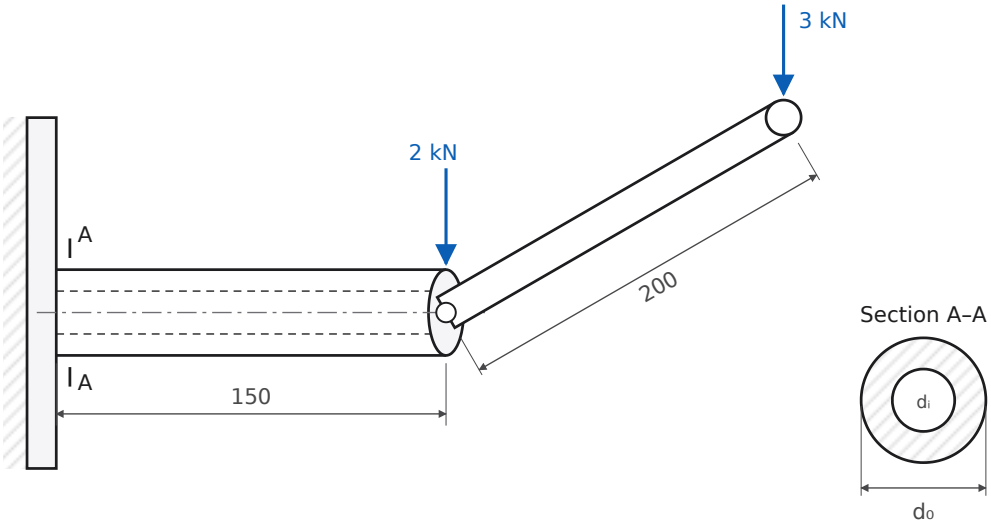

Fig. 2.6 Crank lever (redrawn): hollow arm 150 long fixed to the wall, crank 200 long at its free end. Critical section A–A at the wall, $d_o/d_i = 2$

1. Selection of material

The lever arm carries combined bending and torsion. The load at the crank end may be applied suddenly, and the lever is a forged component of irregular shape. The material therefore needs good tensile strength, plus ductility and toughness to absorb shock without brittle fracture, and it must forge and machine well at low cost.

- Grey cast iron is rejected: it is brittle and weak in tension and bending under shock.
- Alloy steel is unnecessary for such modest loads.
- A medium-carbon plain steel satisfies all the requirements. **Select 40C8** (IS 1570; equivalent to AISI 1040), forged and normalised.

Assumed 40C8: $S_{ut} = 600$ MPa, $S_{yt} = 380$ MPa (values used in Bhandari's worked examples; the IS 1570 minimum is 580 MPa). FOS 2.5 on S_{ut}.

$$\sigma_{\text{allow}} = \frac{S_{ut}}{N} = \frac{600}{2.5} = 240 \text{ MPa}$$

2. Forces at the critical section A–A (fixed end)

Both loads are vertical, so their bending moments at the wall act in the same plane. The 3 kN load is offset 200 mm from the tube axis, so it also twists the tube.

Load	Lever arm for bending at A	Bending moment	Torque on tube
2 kN at the junction	150 mm	$2000(150) = 300$ N·m	0
3 kN at crank end	150 mm (axial distance)	$3000(150) = 450$ N·m	$3000(200) = 600$ N·m
Total		$M = 750$ N·m	$T = 600$ N·m

The transverse shear (5 kN) is zero at the outer fibre, where the bending stress is largest, so it is neglected.

3. Diameter by maximum principal stress theory

The FOS is specified on tensile strength, so the maximum principal stress is limited to S_{ut}/N. With $k = d_i/d_o = 0.5$, $1 - k^4 = 0.9375$:

$$M_e = \tfrac{1}{2}\left(M + \sqrt{M^2 + T^2}\right) = \tfrac{1}{2}\left(750 + \sqrt{750^2 + 600^2}\right) = \tfrac{1}{2}(750 + 960.47) = 855.23 \text{ N·m}$$

$$\sigma_1 = \frac{32 M_e}{\pi d_o^3 (1 - k^4)} \;\Rightarrow\; d_o^3 = \frac{32(855.23 \times 10^3)}{\pi (240)(0.9375)} \;\Rightarrow\; d_o = 33.83 \text{ mm}$$

4. Check by maximum shear stress theory (alternative)

For a ductile steel, MSST with $\tau_{\text{allow}} = 0.5(240) = 120$ MPa is often used:

$$T_e = \sqrt{M^2 + T^2} = 960.47 \text{ N·m}, \qquad d_o^3 = \frac{16(960.47 \times 10^3)}{\pi (120)(0.9375)} \;\Rightarrow\; d_o = 35.16 \text{ mm}$$

5. Adopted size and stresses

Adopt $d_o = 36$ mm and $d_i = 18$ mm. This satisfies both theories and keeps $d_o/d_i = 2$ with a whole-number bore.

$$Z = \frac{\pi}{32}(36)^3(0.9375) = 4294 \text{ mm}^3, \qquad \sigma_b = \frac{750 \times 10^3}{4294} = 174.7 \text{ MPa}, \qquad \tau = \frac{600 \times 10^3}{2(4294)} = 69.9 \text{ MPa}$$

$$\sigma_1 = \frac{174.7}{2} + \sqrt{\left(\frac{174.7}{2}\right)^2 + 69.9^2} = 199.2 \text{ MPa} \;\Rightarrow\; N = \frac{600}{199.2} = 3.01 > 2.5$$

$$\tau_{\max} = \sqrt{\left(\frac{174.7}{2}\right)^2 + 69.9^2} = 111.8 \text{ MPa} \;\Rightarrow\; N = \frac{300}{111.8} = 2.68 > 2.5$$

Answer. Material: forged plain-carbon steel 40C8 (S_{ut} = 600 MPa). Critical section at the wall: M = 750 N·m, T = 600 N·m. Required d_o = 33.8 mm (MPST) or 35.2 mm (MSST). **Adopt d_o = 36 mm, d_i = 18 mm**, giving FOS 3.01 (MPST) and 2.68 (MSST).

Exam tip Two moments are commonly missed: the 3 kN load also bends the tube (its line of action is 150 mm from the wall along the axis), and it twists it by 3×0.2 kN·m. Don't add the 200 mm arm to the bending lever arm. The bending arm at the wall is the axial distance, 150 mm.

3 Fatigue and fluctuating loads

Endurance limit and the Goodman/Soderberg/Gerber diagram are asked as theory in six papers. The mid-sems add numericals on Miner's rule and on Goodman design for torsion.

KEY FORMULAS

- Endurance limit of the R.R. Moore specimen: $S'_e = 0.5 S_{ut}$ (wrought steel), $0.4 S_{ut}$ (cast iron and cast steel)
- Corrected endurance limit (Bhandari): $S_e = K_a K_b K_c K_d \, S'_e$, where $K_d = 1/K_f$. Torsion: $S_{se} = 0.577 S_e$; axial: $0.8 S_e$
- Surface factor $K_a = a S_{ut}^{b}$ (ground 1.58, −0.085; machined 4.51, −0.265; hot-rolled 57.7, −0.718; forged 272, −0.995). Size factor K_b = 1 ($d \le 7.5$), 0.85 ($7.5 < d \le 50$), 0.75 ($d > 50$ mm). Reliability K_c = 1, 0.897, 0.868, 0.814 for 50, 90, 95, 99%
- S–N line (steel): $0.9 S_{ut}$ at 10^3 cycles, S_e at 10^6 cycles, a straight line on log–log axes: $\log S = A - b \log N$
- Miner's rule: $\sum \dfrac{n_i}{N_i} = 1$. With time fractions α_i: life $N = \dfrac{1}{\sum \alpha_i / N_i}$
- $\sigma_m = \dfrac{\sigma_{\max} + \sigma_{\min}}{2}$, $\sigma_a = \dfrac{\sigma_{\max} - \sigma_{\min}}{2}$
- Goodman $\dfrac{\sigma_a}{S_e} + \dfrac{\sigma_m}{S_{ut}} = \dfrac{1}{N}$; Soderberg $\dfrac{\sigma_a}{S_e} + \dfrac{\sigma_m}{S_{yt}} = \dfrac{1}{N}$; Gerber $\dfrac{N\sigma_a}{S_e} + \left(\dfrac{N\sigma_m}{S_{ut}}\right)^2 = 1$. In shear, use S_{se}, $S_{su} \approx 0.67 S_{ut}$ and $S_{sy} = 0.577 S_{yt}$

Theory

Q 3.1 AE302 May 2023 Q1(a) — 4 marks

Explain the term 'endurance limit' of a material. Explain the factors which affect the endurance limit of a material.

SOLUTION

Endurance limit (S'_e) is the maximum amplitude of completely reversed stress that a standard specimen can withstand for an infinite number of cycles without fatigue failure. The standard specimen is the R.R. Moore rotating-beam specimen: 7.5 mm diameter, mirror-polished, tested in reversed bending. For steels the S–N curve becomes horizontal at about 10^6 cycles, and $S'_e \approx 0.5 S_{ut}$. Non-ferrous metals such as aluminium have no knee. For them a *fatigue strength* at a stated life (for example 5×10^8 cycles) is quoted instead.

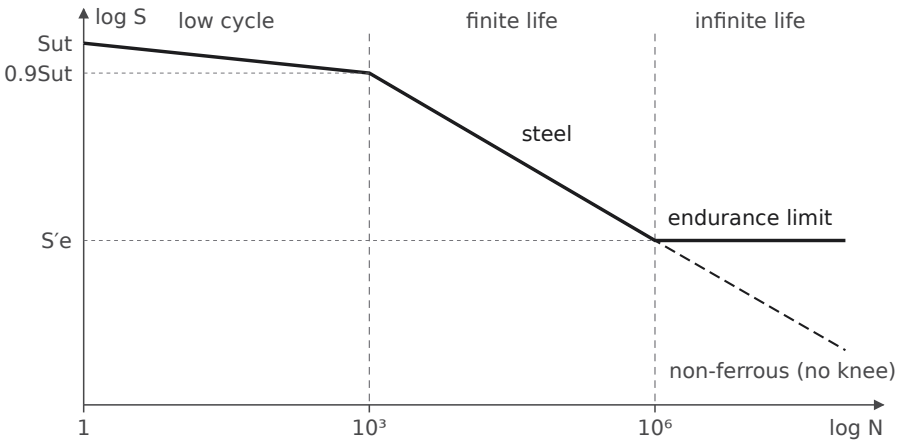

Fig. 3.1 S–N curve of steel (log–log): the knee at about 10^6 cycles defines the endurance limit

Factors affecting the endurance limit. A real part differs from the laboratory specimen, so S'_e is reduced to $S_e = K_a K_b K_c K_d \, S'_e$:

1. **Surface finish, K_a:** machining marks and rough or decarburised surfaces (hot-rolled, forged) act as small notches. K_a falls as S_{ut} rises and as the surface gets rougher (ground about 0.9, hot-rolled about 0.5–0.7).
2. **Size, K_b:** a larger part has a larger volume of highly stressed material, so a flaw is more likely to be present there. K_b = 0.85 for 7.5–50 mm and 0.75 above 50 mm.
3. **Reliability, K_c:** S'_e is a mean (50% survival) value. For 90% reliability $K_c = 0.897$, and for 99% $K_c = 0.814$.
4. **Stress concentration, $K_d = 1/K_f$:** notches, keyways and shoulders lower the effective endurance limit.
5. **Type of load:** reversed bending is the reference. Axial loading gives about $0.8 S_e$, because the whole section is at the peak stress. Torsion gives $S_{se} = 0.577 S_e$.
6. **Other factors:** high temperature (lowers strength), corrosion (pits and corrosion fatigue), and residual stresses. Compressive residual stress from shot peening, surface rolling or case hardening raises S_e. Tensile residual stress from grinding, welding or plating lowers it.

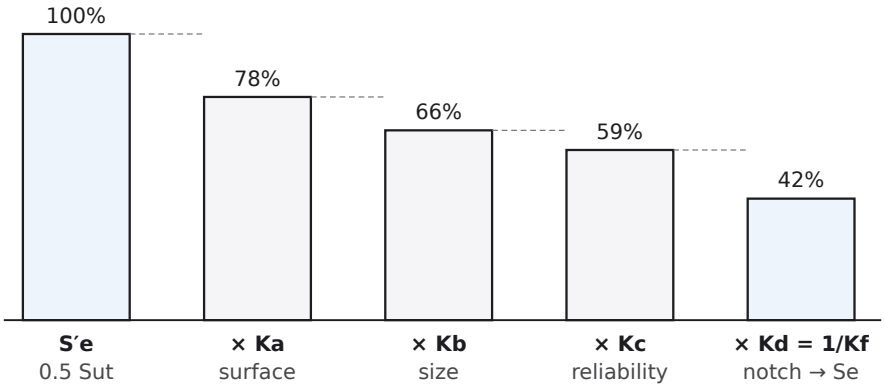

Fig. 3.2 How the modifying factors reduce S′e to the endurance limit Se of the actual part (typical values: Ka = 0.78, Kb = 0.85, Kc = 0.897 for 90% reliability, Kf = 1.4)

Q 3.2 ME305 Mid-sem Sep 2019 Q1(a) — 2 marks

Differentiate stress-life approach and strain-life approach model for design.

SOLUTION

Stress-life (S–N) approach	Strain-life (ε–N) approach
Life is related to the nominal **stress** amplitude: S–N curve, endurance limit, Goodman diagram.	Life is related to the local **strain** amplitude at the notch root, split into elastic and plastic parts.
Assumes the stresses stay elastic everywhere.	Accounts for local plastic deformation at notches. Cyclic stress–strain behaviour (hardening or softening) is included.
Suited to **high-cycle fatigue** ($N > 10^3$, usually 10^6 and above, i.e. infinite life). Used for shafts, springs and gears.	Suited to **low-cycle fatigue** ($N < 10^3$–10^4) with large strains: pressure vessels, turbine discs, thermal cycling.
Simple. Data are readily available (S_{ut}, S_e, modifying factors).	Needs cyclic material constants (σ'_f, b, ε'_f, c) and more analysis.
Equation: $S_f = aN^b$ (Basquin).	Coffin–Manson relation: $\varepsilon_a = \frac{\sigma'_f}{E}(2N_f)^b + \varepsilon'_f(2N_f)^c$

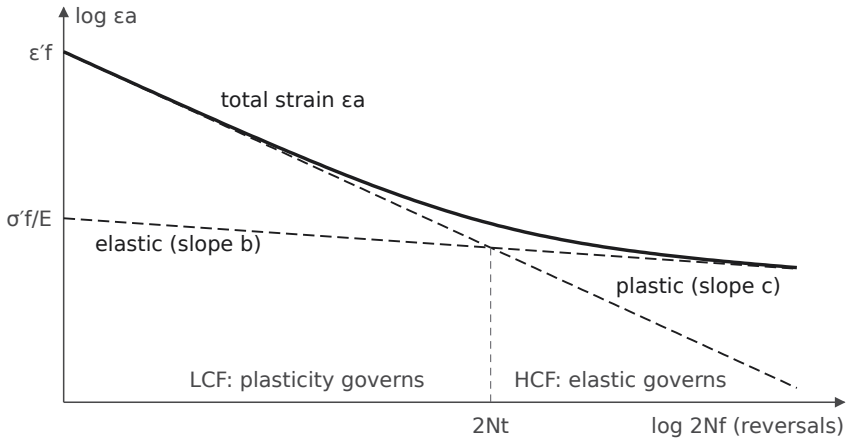

Fig. 3.3 Strain-life curve: elastic and plastic lines add to give the total strain amplitude. Below the transition life 2Nt plastic strain dominates (low-cycle fatigue)

Q 3.3 ME-313 May 2019 Q1(a) · ME-313 (2nd paper) Q1(a) · CME-403 Nov 2024 Q2(b) · AE302 May 2024 Q1(b) · ME305 Mid-sem Sep 2019 Q1(f) — 2–5 marks

Draw Goodman diagram, Soderberg line and Gerber parabola. Explain briefly (and write related equations).

Also asked as: "Differentiate between Goodman's and Soderberg's analysis for fluctuating loads" (AE302, 4 marks); "Discuss the effects of mean stress on fatigue of a component using Haigh-Soderberg diagram" (ME305, 2 marks).

SOLUTION

A fluctuating stress has a mean component σ_m and an alternating component σ_a. Test points of failure plotted with σ_m on the horizontal axis and σ_a on the vertical axis form the **Haigh diagram**. The vertical intercept is S_e (completely reversed stress, $\sigma_m = 0$). The horizontal intercept is the static strength. Each criterion is a curve joining these two points.

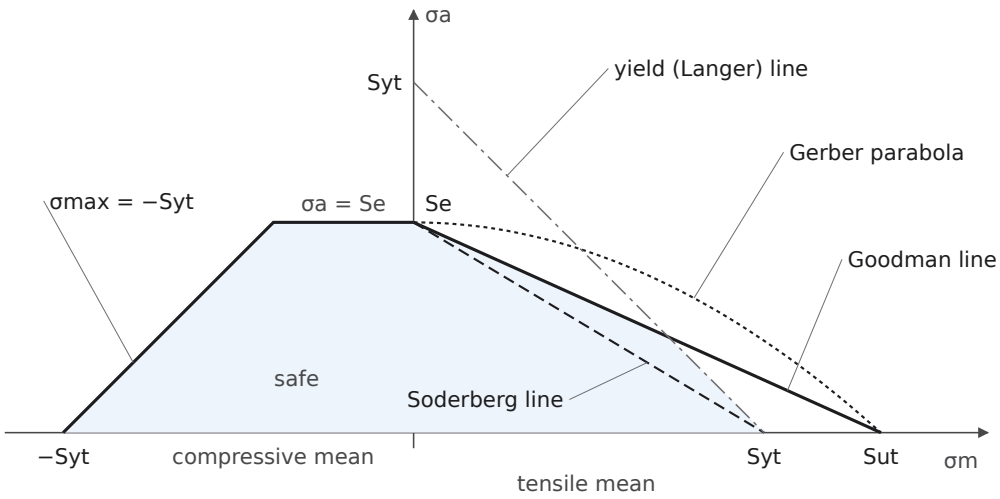

Fig. 3.4 Haigh (σm–σa) diagram with the Gerber, Goodman and Soderberg criteria and the yield line. Shaded: safe region of the modified Goodman diagram (Se = 0.45Sut, Syt = 0.75Sut shown)

- **Gerber parabola** (through S_e and S_{ut}): $\dfrac{N\sigma_a}{S_e} + \left(\dfrac{N\sigma_m}{S_{ut}}\right)^2 = 1$. It passes through the middle of the test data for ductile materials, so it is the most accurate, but it is non-linear and not conservative.
- **Goodman line** (straight line through S_e and S_{ut}): $\dfrac{\sigma_a}{S_e} + \dfrac{\sigma_m}{S_{ut}} = \dfrac{1}{N}$. It lies just inside the test data, so it is safe and simple, and it is the usual design criterion. Combined with the yield line $\sigma_a + \sigma_m = S_{yt}/N$ it forms the **modified Goodman diagram**.
- **Soderberg line** (straight line through S_e and S_{yt}): $\dfrac{\sigma_a}{S_e} + \dfrac{\sigma_m}{S_{yt}} = \dfrac{1}{N}$. It guards against both fatigue and yielding with one equation, but it is very conservative.

Goodman versus Soderberg

	Goodman	Soderberg
Line joins	S_e to S_{ut}	S_e to S_{yt}
Basis	Fatigue fracture	Yielding as the limit of static failure
Conservatism	Moderately conservative; close to the test data	Highly conservative, so parts are heavier
Yield check	A separate check against the yield line is needed when σ_m is large	Not needed: the line lies wholly inside the yield line
Use	General design and brittle materials; Bhandari's standard method	Ductile materials where no yielding at all is allowed

Effect of mean stress (Haigh–Soderberg diagram)

- **Tensile mean stress** lowers the permissible alternating stress. As σ_m rises from 0 to S_{ut} (or S_{yt}), the allowable σ_a falls from S_e to zero along the chosen line. Tensile mean stress helps cracks open and grow.
- **Compressive mean stress** does not reduce the fatigue strength (it is even slightly beneficial, since it closes cracks). The allowable amplitude stays at $\sigma_a = S_e$ until the peak compressive stress reaches yield, $|\sigma_m| + \sigma_a = S_{yt}$. This is why shot peening and surface rolling, which leave residual compression, improve fatigue life.

Numericals

Q 3.4 ME305 Mid-sem Sep 2019 Q2 — 10 marks

A shaft made of AISI4340 with UTS of 650 MPa is subjected to completely reversed bending stresses for the following percentage of time: ±400 MPa for 75% of time, ±480 MPa for 13% of time, ±600 MPa for 7% of time and ±300 MPa for 5% of time. Draw SN diagram and determine life of the shaft in number of cycles.

SOLUTION

Assumed The standard S–N line of Bhandari/Shigley: $0.9S_{ut}$ at 10^3 cycles and $S_e' = 0.5S_{ut}$ at 10^6 cycles, straight on log–log axes. No surface, size or reliability data are given, so $S_e = S_e'$ (a polished specimen-like shaft).

1. Points on the S–N diagram

$$S_{10^3} = 0.9(650) = 585 \text{ MPa}, \qquad S_e = 0.5(650) = 325 \text{ MPa at } 10^6 \text{ cycles}$$

2. Equation of the S–N line

$$\log S = A - b \log N, \qquad b = \frac{\log 585 - \log 325}{6 - 3} = \frac{\log 1.8}{3} = 0.08509$$

$$A = \log 585 + 3b = 3.0224 \;\Rightarrow\; S = 1053\, N^{-0.08509}, \qquad N = 10^3 \left(\frac{585}{S}\right)^{11.752}$$

3. Life at each stress level

Stress (MPa)	Time fraction α_i	Life N_i (cycles)	α_i / N_i	Share of damage
±400	0.75	$10^3(585/400)^{11.752} = 87\,143$	8.607×10^{-6}	7.4%
±480	0.13	$10^3(585/480)^{11.752} = 10\,225$	1.271×10^{-5}	11.0%
±600	0.07	$10^3(585/600)^{11.752} = 743$	9.426×10^{-5}	81.6%
±300	0.05	∞ (300 < S_e = 325)	0	0
Sum			1.1558×10^{-4}	100%

The ±300 MPa level is below the endurance limit, so it does no fatigue damage. The ±600 MPa level is above $0.9S_{ut}$, so its life comes from extending the same line below 10^3 cycles. It is in the low-cycle region.

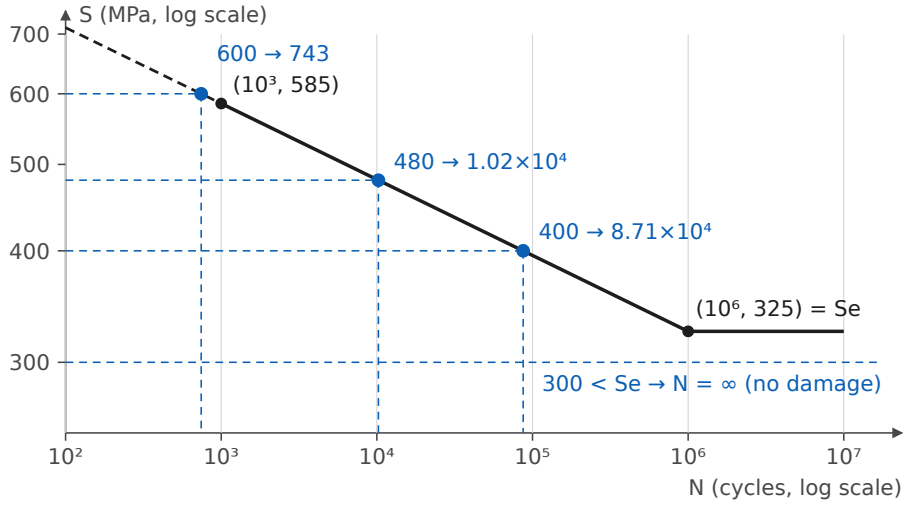

Fig. 3.5 S–N diagram for AISI 4340 (Sut = 650 MPa) on log–log axes, with the life at each stress level. The dashed part is the line extended below 10^3 cycles

4. Miner's rule

If N is the total life, the shaft spends $n_i = \alpha_i N$ cycles at level i, and failure occurs when $\sum n_i/N_i = 1$:

$$N\sum \frac{\alpha_i}{N_i} = 1 \;\Rightarrow\; N = \frac{1}{\dfrac{0.75}{87\,143} + \dfrac{0.13}{10\,225} + \dfrac{0.07}{743} + 0} = \frac{1}{1.1558 \times 10^{-4}} = 8652 \text{ cycles}$$

Cycles at each level before failure: 6489 at ±400, 1125 at ±480, 606 at ±600 and 433 at ±300.

Answer. S–N line: $S = 1053N^{-0.0851}$ between $(10^3, 585)$ and $(10^6, 325)$. $N_{400} = 8.71 \times 10^4$, $N_{480} = 1.02 \times 10^4$, $N_{600} = 743$, $N_{300} = \infty$. **Life of the shaft ≈ 8650 cycles.**

Exam tip ±600 MPa exceeds $0.9S_{ut}$. If you use Shigley's low-cycle line from S_{ut} at $N = 1$ to $0.9S_{ut}$ at 10^3 instead of extending the high-cycle line, you get $N_{600} \approx 190$ and a life of about 2570 cycles. Either way, the short spells at ±600 MPa cause over 80% of the damage. State which line you use.

Q 3.5 ME-304 Mid-sem Mar 2024 Q4 — 5 marks

A hot rolled steel rod made of AISI4045 steel is subjected to a torsional load that varies from −110 Nm to 440 Nm. If the yield and tensile strengths of the material are 310 MPa and 460 MPa respectively, determine the required diameter of the rod using a factor of safety of 1.75 for infinite life using only Goodman criteria.

SOLUTION

1. Mean and alternating torque

$$T_m = \frac{440 + (-110)}{2} = 165 \text{ N·m}, \qquad T_a = \frac{440 - (-110)}{2} = 275 \text{ N·m}$$

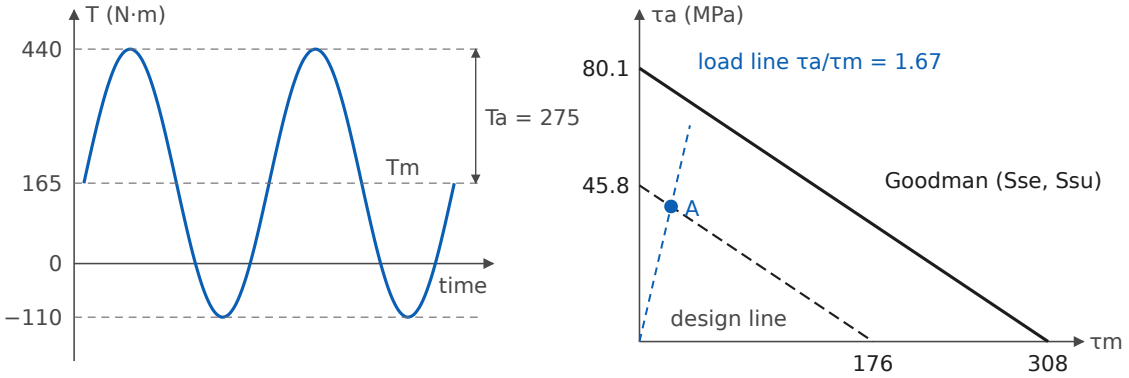

(a) Torque cycle (b) Goodman diagram in shear

Fig. 3.6 (a) Torque cycle; (b) Goodman line in shear, the design line (strengths ÷ 1.75) and the operating point A (τm = 23.8, τa = 39.6 MPa) for d = 32.8 mm

2. Endurance limit in shear

Assumed Surface factor for hot-rolled steel: $K_a = 57.7S_{ut}^{-0.718}$. Size factor $K_b = 0.85$ for $7.5 < d \le 50$ mm, to be checked at the end. Reliability 50% ($K_c = 1$, as none is specified). Plain rod, so $K_d = 1$. In shear, $S_{se} = 0.577S_e$ (DET) and $S_{su} = 0.67S_{ut}$.

$$S'_e = 0.5(460) = 230 \text{ MPa}, \qquad K_a = 57.7(460)^{-0.718} = 0.707 \approx 0.71$$

$$S_e = K_aK_bK_cK_d\,S'_e = 0.71(0.85)(1)(1)(230) = 138.8 \text{ MPa}, \qquad S_{se} = 0.577(138.8) = 80.09 \text{ MPa}$$

$$S_{su} = 0.67(460) = 308.2 \text{ MPa}, \qquad S_{sy} = 0.577(310) = 178.9 \text{ MPa}$$

3. Goodman criterion in shear

$$\frac{\tau_a}{S_{se}} + \frac{\tau_m}{S_{su}} = \frac{1}{N}, \qquad \tau = \frac{16T}{\pi d^3}$$

$$\frac{16}{\pi d^3}\left(\frac{275\times10^3}{80.09} + \frac{165\times10^3}{308.2}\right) = \frac{1}{1.75} \;\Rightarrow\; \frac{16}{\pi d^3}(3433.6 + 535.4) = \frac{1}{1.75}$$

$$d^3 = \frac{1.75(16)(3969.0)}{\pi} = 35\,374\ \text{mm}^3 \;\Rightarrow\; d = 32.83\ \text{mm}$$

Size-factor check: 32.8 mm lies in the 7.5–50 mm range, so $K_b = 0.85$ is correct and no iteration is needed. With Shigley's $K_b = 1.24 d^{-0.107} = 0.854$, the iteration converges to $d = 32.78$ mm, practically the same.

4. Standard size and check

Adopt **d = 35 mm**.

$$\tau_a = \frac{16(275\times10^3)}{\pi(35)^3} = 32.67\ \text{MPa}, \qquad \tau_m = \frac{16(165\times10^3)}{\pi(35)^3} = 19.60\ \text{MPa}$$

$$N = \left(\frac{32.67}{80.09} + \frac{19.60}{308.2}\right)^{-1} = 2.12 > 1.75$$

First-cycle yield check: $\tau_{\max} = 32.67 + 19.60 = 52.27$ MPa, which is less than $S_{sy} = 178.9$ MPa ($N_y = 3.42$). Safe.

> **Answer.** T_m = 165 N·m, T_a = 275 N·m; S_{se} = 80.1 MPa, S_{su} = 308.2 MPa. Required d = 32.8 mm, so **use d = 35 mm** (fatigue FOS 2.12).

Exam tip If you take $S_{su} = 0.577 S_{ut} = 265.4$ MPa, you get $d = 33.1$ mm, still 35 mm. Don't apply 0.577 twice: either reduce S_e to S_{se} with 0.577, or include 0.577 as a load factor in the Marin equation, not both.

4 Cotter and knuckle joints

Socket-and-spigot cotter joints and knuckle joints designed with Bhandari's proportions and a full set of failure checks. A cotter-joint design question appears in almost every sitting, and bending of the cotter is a favourite short question.

KEY FORMULAS

- Rod in tension: $P = \frac{\pi}{4} d^2 \sigma_t$
- Spigot across slot: $P = \left(\frac{\pi}{4} d_2^2 - d_2 t\right) \sigma_t$; socket across slot: $P = \left[\frac{\pi}{4}(d_1^2 - d_2^2) - (d_1 - d_2)t\right] \sigma_t$
- Crushing: spigot $P = d_2 t \sigma_c$; socket collar $P = (d_4 - d_2) t \sigma_c$; spigot collar $P = \frac{\pi}{4}(d_3^2 - d_2^2)\sigma_c$
- Shear: cotter $P = 2bt\tau$; spigot end $P = 2a d_2 \tau$; socket end $P = 2(d_4 - d_2)c\tau$; spigot collar $P = \pi d_2 t_1 \tau$
- Cotter bending: $M = \frac{P}{2}\left(\frac{d_2}{4} + \frac{d_4 - d_2}{6}\right)$, $\sigma_b = \dfrac{M}{tb^2/6}$
- Cotter-joint proportions: $t = 0.31d$, $d_3 = 1.5d$, $d_4 = 2.4d$, $a = c = 0.75d$, $t_1 = 0.45d$, $l = 4d$, taper 1 in 32
- Knuckle pin: double shear $P = 2 \cdot \frac{\pi}{4} d_1^2 \tau$; bending $M = \frac{P}{2}\left(\frac{b}{4} + \frac{a}{3}\right)$, $\sigma_b = \dfrac{32M}{\pi d_1^3}$
- Eye: $P = (d_2 - d_1) b \sigma_t$, $P = (d_2 - d_1) b \tau$, $P = d_1 b \sigma_c$. Fork: $P = 2(d_2 - d_1) a \sigma_t$, $P = 2(d_2 - d_1) a \tau$, $P = 2 d_1 a \sigma_c$
- Knuckle proportions: $d_1 = d$, $d_2 = 2d$, $d_3 = 1.5d$, $a = 0.75d$ (fork), $b = 1.25d$ (eye)

Cotter joint

Q 4.1 ME-313 May 2019 Q1(c) · ME-313 (2nd paper) Q1(c) · CME-403 Nov 2024 Q2(a) — 4 marks (2 in CME-403)

Explain the bending failure of the cotter (also write the related equations).

SOLUTION

- The cotter acts as a beam across the joint. The spigot pushes on its middle portion (length d_2) and the socket collar pushes back on the two outer portions, each of length $\frac{d_4 - d_2}{2}$.
- Bhandari takes the spigot load P as **uniformly distributed** over d_2. The socket-collar load is taken as **triangular** on each side ($P/2$ each), largest at the spigot surface, so its resultant acts at one third of $\frac{d_4 - d_2}{2}$ from the spigot surface.
- The cotter therefore bends about an axis parallel to its thickness t, with depth b in the plane of bending. If b is too small, the cotter bows, the joint loosens, and the cotter can crack at the centre.

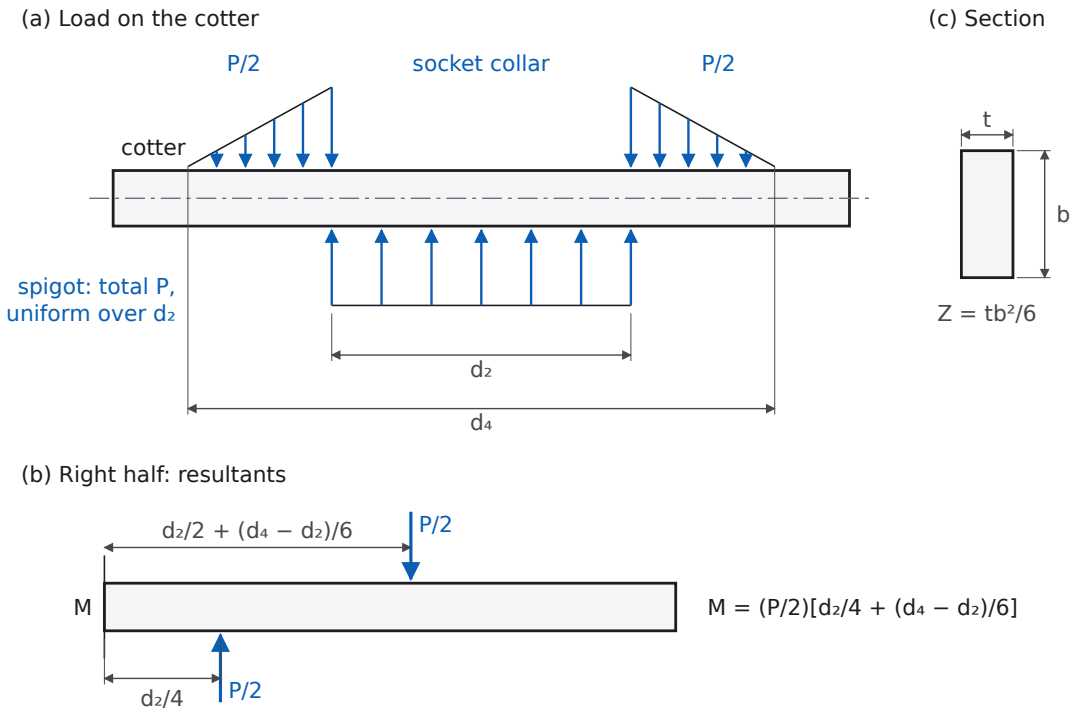

Fig. 4.1 Loading on the cotter: (a) distributed loads, (b) resultants on one half, (c) cotter section

Taking moments about the centre for the right half (Fig. 4.1b):

$$M = \frac{P}{2}\left[\left(\frac{d_2}{2} + \frac{d_4 - d_2}{6}\right) - \frac{d_2}{4}\right] = \frac{P}{2}\left(\frac{d_2}{4} + \frac{d_4 - d_2}{6}\right)$$

$$Z = \frac{t b^2}{6}, \qquad \sigma_b = \frac{M}{Z} = \frac{3P}{t b^2}\left(\frac{d_2}{4} + \frac{d_4 - d_2}{6}\right) = \frac{P\,(d_2 + 2d_4)}{4\,t\,b^2}$$

Design rule: find b from shear ($P = 2bt\tau$), then check $\sigma_b \le \sigma_t$ (the permissible bending stress is taken equal to the tensile one). If the check fails, increase b until $b \ge \sqrt{6M/(t\sigma_b)}$.

Exam tip Draw the load sketch and state the two distribution assumptions. Most of the marks are for showing where the $\frac{d_4-d_2}{6}$ term comes from.

Q 4.2 ME304 End-sem May 2023 Q3 · ME262 May/June 2019 Q5 — 8 marks

Design a simple cotter joint for an axial load of 100 kN. Assume that all the parts are made of the same material with permissible stresses of 70 MPa, 50 MPa and 90 MPa in tension, shear and compression respectively.

SOLUTION

Assumed "Simple cotter joint" is read as the standard socket-and-spigot cotter joint. Bhandari's proportions are used. Permissible bending stress for the cotter is $\sigma_b = \sigma_t = 70$ MPa.

Data: $P = 100$ kN, $\sigma_t = 70$, $\tau = 50$, $\sigma_c = 90$ MPa. The notation is shown in Fig. 4.2.

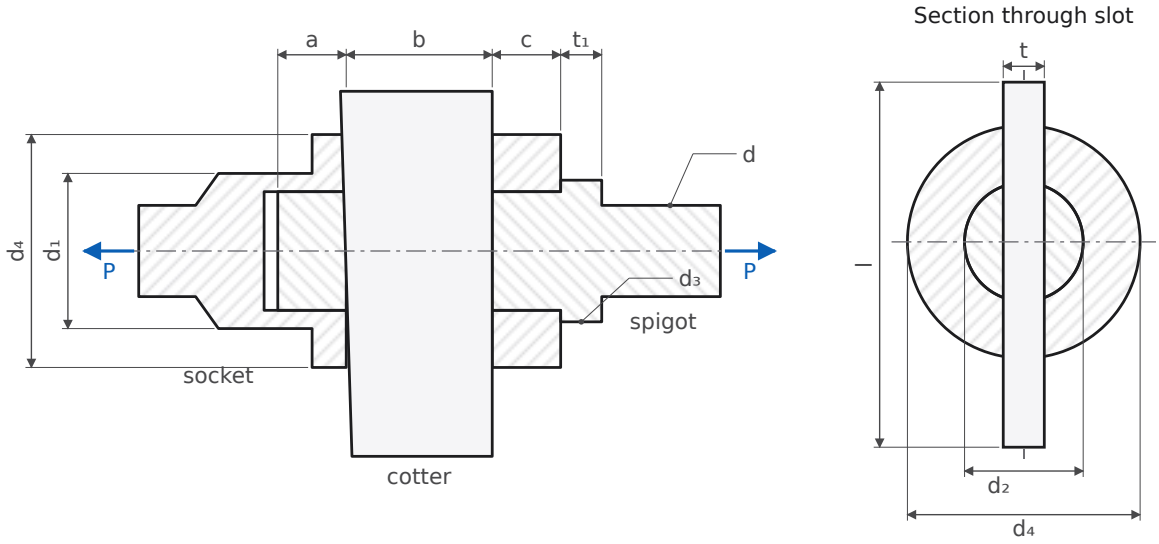

Fig. 4.2 Socket-and-spigot cotter joint: notation (sectional elevation and section through the slot)

1. Rod diameter

$$d = \sqrt{\frac{4P}{\pi\sigma_t}} = \sqrt{\frac{4(100\times10^3)}{\pi(70)}} = 42.65\text{ mm} \;\rightarrow\; d = 45\text{ mm}$$

2. Spigot diameter d_2 and cotter thickness t

With $t = 0.31d = 13.95 \rightarrow 14$ mm, spigot tension gives $\frac{\pi}{4}d_2^2 - 14d_2 = \frac{100\times10^3}{70}$, so $d_2 = 52.5 \rightarrow 55$ mm. Spigot crushing check: $\sigma_c = \frac{P}{d_2 t} = \frac{100\times10^3}{55(14)} = 129.9\text{ MPa} > 90$, which **fails**.

So size d_2 and t for tension and crushing together. Crushing needs $d_2 t = P/\sigma_c$, and the net area at the slot must carry P/σ_t:

$$\frac{\pi}{4}d_2^2 \geq \frac{P}{\sigma_t} + \frac{P}{\sigma_c} = 1428.6 + 1111.1 \;\Rightarrow\; d_2 \geq 56.86 \;\rightarrow\; d_2 = 58\text{ mm}$$

$$t = \frac{P}{\sigma_c d_2} = \frac{100\times10^3}{90(58)} = 19.2 \;\rightarrow\; t = 20\text{ mm}$$

Check: $\sigma_t = \dfrac{100\times10^3}{\frac{\pi}{4}(58)^2 - 58(20)} = 67.5$ MPa and $\sigma_c = \dfrac{100\times10^3}{58(20)} = 86.2$ MPa, both safe.

3. Outside diameter of socket d_1

$$\left[\frac{\pi}{4}(d_1^2 - 58^2) - (d_1 - 58)(20)\right](70) = 100\times10^3 \;\Rightarrow\; d_1 = 74.9 \;\rightarrow\; d_1 = 75\text{ mm}$$

4. Collar diameters d_4 and d_3

Proportions give $d_4 = 2.4d = 108$ and $d_3 = 1.5d = 67.5$ mm. Crushing governs both:

$$\text{Socket collar: } d_4 \geq d_2 + \frac{P}{\sigma_c t} = 58 + \frac{100\times10^3}{90(20)} = 113.6 \;\rightarrow\; d_4 = 115\text{ mm}$$

$$\text{Spigot collar: } d_3 \geq \sqrt{d_2^2 + \frac{4P}{\pi\sigma_c}} = \sqrt{58^2 + \frac{4(100\times10^3)}{\pi(90)}} = 69.1 \;\rightarrow\; d_3 = 70\text{ mm}$$

5. Distances a, c and collar thickness t_1

$a = c = 0.75d = 33.75 \rightarrow 34$ mm and $t_1 = 0.45d = 20.25 \rightarrow 21$ mm.

6. Width of cotter b

$$\text{Shear: } b = \frac{P}{2t\tau} = \frac{100\times10^3}{2(20)(50)} = 50\text{ mm}$$

$$\text{Bending: } M = \frac{P}{2}\left(\frac{d_2}{4} + \frac{d_4 - d_2}{6}\right) = 50\,000\left(\frac{58}{4} + \frac{57}{6}\right) = 1.20 \times 10^6 \text{ N mm}$$

$$b = \sqrt{\frac{6M}{t\sigma_b}} = \sqrt{\frac{6(1.2 \times 10^6)}{20(70)}} = 71.7 \;\rightarrow\; b = 72 \text{ mm}$$

7. Length of cotter

$l = 4d = 180$ mm, taper 1 in 32, with 2–3 mm clearance at the slot so the cotter draws the parts together.

8. Stress checks with the final sizes

Mode	Expression	Stress (MPa)	Limit
Rod tension	$P/\frac{\pi}{4}d^2$	62.9	70 ✓
Spigot tension at slot	$P/(\frac{\pi}{4}d_2^2 - d_2 t)$	67.5	70 ✓
Socket tension at slot	$P/[\frac{\pi}{4}(d_1^2 - d_2^2) - (d_1 - d_2)t]$	69.7	70 ✓
Spigot crushing	$P/(d_2 t)$	86.2	90 ✓
Socket collar crushing	$P/[(d_4 - d_2)t]$	87.7	90 ✓
Spigot collar crushing	$P/\frac{\pi}{4}(d_3^2 - d_2^2)$	82.9	90 ✓
Cotter shear	$P/(2bt)$	34.7	50 ✓
Spigot end shear	$P/(2ad_2)$	25.4	50 ✓
Socket end shear	$P/[2(d_4 - d_2)c]$	25.8	50 ✓
Spigot collar shear	$P/(\pi d_2 t_1)$	26.1	50 ✓
Cotter bending	$M/(tb^2/6)$	69.4	70 ✓

Answer. d = 45, d_1 = 75, d_2 = 58, d_3 = 70, d_4 = 115, t = 20, b = 72, a = c = 34, t_1 = 21, l = 180 (all mm).

Exam tip With $\sigma_c = 90$ MPa the empirical $t = 0.31d$ fails in crushing. The quick fix is $\frac{\pi}{4}d_2^2 \geq P\left(\frac{1}{\sigma_t} + \frac{1}{\sigma_c}\right)$, then $t = P/(\sigma_c d_2)$. Show that the empirical value failed before you change it.

Q 4.3 ME-313 May 2019 Q2 · CME-403 Nov 2024 Q3 · ME-313 (2nd paper) Q2 (variant) 14 marks (8 in CME-403)

Design a spigot-socket cotter joint for an axial load of 80 kN in tension and compression. It is assumed that all parts are made of the same material with permissible stresses of 70 MPa, 50 MPa and 90 MPa in tension, shear and compression respectively. Also sketch the joint.

Variant (ME-313 2nd paper Q2): 90 kN with 70 MPa, 40 MPa and 100 MPa (solved at the end).

SOLUTION

Assumed Bhandari's socket-and-spigot proportions; permissible bending stress for the cotter is $\sigma_b = \sigma_t = 70$ MPa. Notation as in Fig. 4.2.

1. Rod diameter

$$d = \sqrt{\frac{4(80 \times 10^3)}{\pi(70)}} = 38.15 \;\rightarrow\; d = 40 \text{ mm}$$

2. Spigot diameter d_2 and cotter thickness t

With $t = 0.31d = 12.4 \rightarrow 13$ mm, spigot tension gives $d_2 = 47.3 \rightarrow 48$ mm, and then $\sigma_c = \frac{80 \times 10^3}{48(13)} = 128$ MPa > 90, which fails. Size d_2 and t for tension and crushing together:

$$\frac{\pi}{4}d_2^2 \geq P\left(\frac{1}{\sigma_t}+\frac{1}{\sigma_c}\right) = 80\times10^3\left(\frac{1}{70}+\frac{1}{90}\right) \Rightarrow d_2 \geq 50.9 \rightarrow d_2 = 52\ \text{mm}$$

$$t = \frac{80\times10^3}{90(52)} = 17.1 \ \rightarrow\ t = 18\ \text{mm}$$

3. Socket outside diameter

$$\left[\frac{\pi}{4}(d_1^2-52^2)-(d_1-52)(18)\right](70) = 80\times10^3 \ \Rightarrow\ d_1 = 67.1 \ \rightarrow\ d_1 = 68\ \text{mm}$$

4. Collars

Socket collar: $d_4 = 2.4d = 96$, but crushing needs $d_4 \geq 52 + \frac{80\times10^3}{90(18)} = 101.4$, so $d_4 = 102$ mm.

Spigot collar: $d_3 = 1.5d = 60$, but crushing needs $d_3 \geq \sqrt{52^2 + \frac{4(80\times10^3)}{\pi(90)}} = 61.9$, so $d_3 = 62$ mm. This collar carries the load when the joint is in compression.

5. a, c, t_1, l

$a = c = 0.75d = 30$ mm, $t_1 = 0.45d = 18$ mm, $l = 4d = 160$ mm, taper 1 in 32.

6. Width of cotter

$$\text{Shear: } b = \frac{80\times10^3}{2(18)(50)} = 44.4\ \text{mm}; \quad M = 40\,000\left(\frac{52}{4}+\frac{102-52}{6}\right) = 8.533\times10^5\ \text{N mm}$$

$$\text{Bending: } b = \sqrt{\frac{6(8.533\times10^5)}{18(70)}} = 63.7 \ \rightarrow\ b = 64\ \text{mm}$$

7. Checks

Mode	Stress (MPa)	Mode	Stress (MPa)
Rod tension	63.7 ✓	Cotter shear	34.7 ✓
Spigot at slot	67.4 ✓	Spigot end shear $P/(2ad_2)$	25.6 ✓
Socket at slot	65.6 ✓	Socket end shear $P/[2(d_4-d_2)c]$	26.7 ✓
Spigot crushing $P/(d_2t)$	85.5 ✓	Spigot collar shear $P/(\pi d_2 t_1)$	27.2 ✓
Socket collar crushing	88.9 ✓	Cotter bending $M/(tb^2/6)$	69.4 ✓
Spigot collar crushing	89.4 ✓		

Under compression the same faces carry the load the other way round: the spigot collar bears on the socket end (checked above), and the cotter is loaded in the reverse direction with the same magnitudes. The rods are short, so buckling is not a concern. The design is safe for both tension and compression.

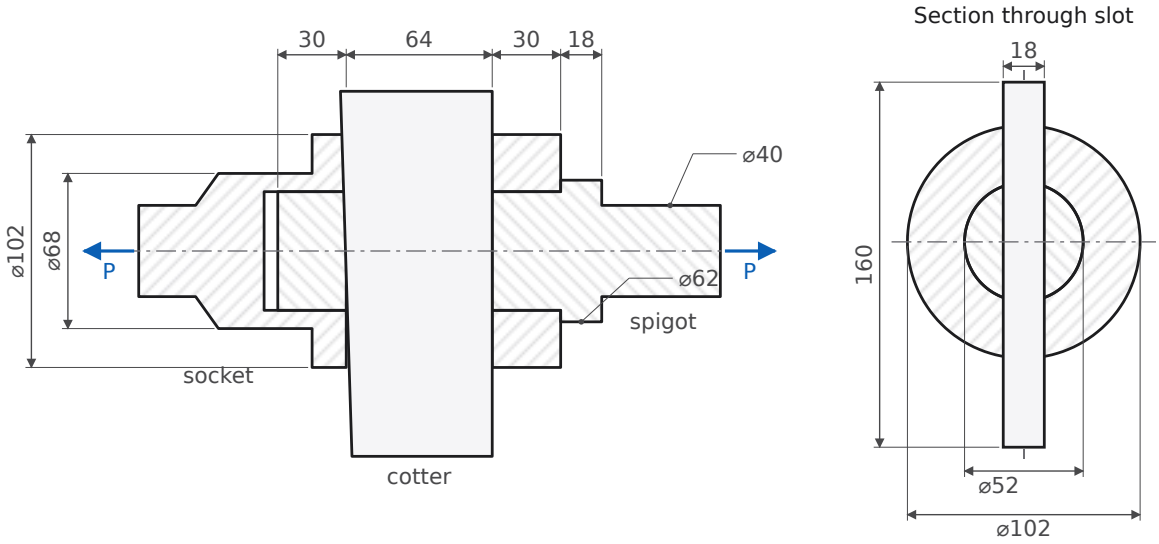

Fig. 4.3 Cotter joint for 80 kN (dimensions in mm)

Answer. d = 40, d_1 = 68, d_2 = 52, d_3 = 62, d_4 = 102, t = 18, b = 64, a = c = 30, t_1 = 18, l = 160 (all mm).

Variant: 90 kN, σ_t = 70, τ = 40, σ_c = 100 MPa

$d = \sqrt{4(90\,000)/70\pi} = 40.5 \to 45$. Combined spigot sizing: $\frac{\pi}{4}d_2^2 \geq 90\,000\left(\frac{1}{70}+\frac{1}{100}\right)$, so $d_2 \geq 52.8 \to 54$, and $t = 90\,000/(100 \times 54) = 16.7 \to 17$. Socket: $d_1 = 70.0 \to 72$. Collars: $d_4 = 2.4d = 108$ (crushing needs ≥ 106.9) and $d_3 = 1.5d = 67.5 \to 68$. Proportions: $a = c = 34$, $t_1 = 21$. Cotter width: $b = 66.2$ from shear and 71.4 from bending ($M = 1.0125 \times 10^6$ N mm), so $b = 72$. Length $l = 180$. Largest stresses: crushing 98.0 MPa, bending 68.9 MPa, cotter shear 36.8 MPa, all safe.

Answer (variant). d = 45, d_1 = 72, d_2 = 54, d_3 = 68, d_4 = 108, t = 17, b = 72, a = c = 34, t_1 = 21, l = 180 (mm).

Knuckle joint

Q 4.4 ME-304 Mid-sem Mar 2024 Q2 5 marks

Design a knuckle joint completely if the fork and eye end of the joint have the same thickness to sustain an axial load of 25 kN. Assume that the knuckle pin is made of AISI 1020 steel with allowable stresses in tension, compression and shear of 50 MPa, 100 MPa and 40 MPa respectively.

SOLUTION

Assumed The rods, fork and eye are of the same steel as the pin (σ_t = 50, σ_c = 100, τ = 40 MPa). The permissible bending stress for the pin is $\sigma_b = \sigma_t$ = 50 MPa. "Same thickness" is taken to mean that each fork jaw is as thick as the eye: $a = b$.

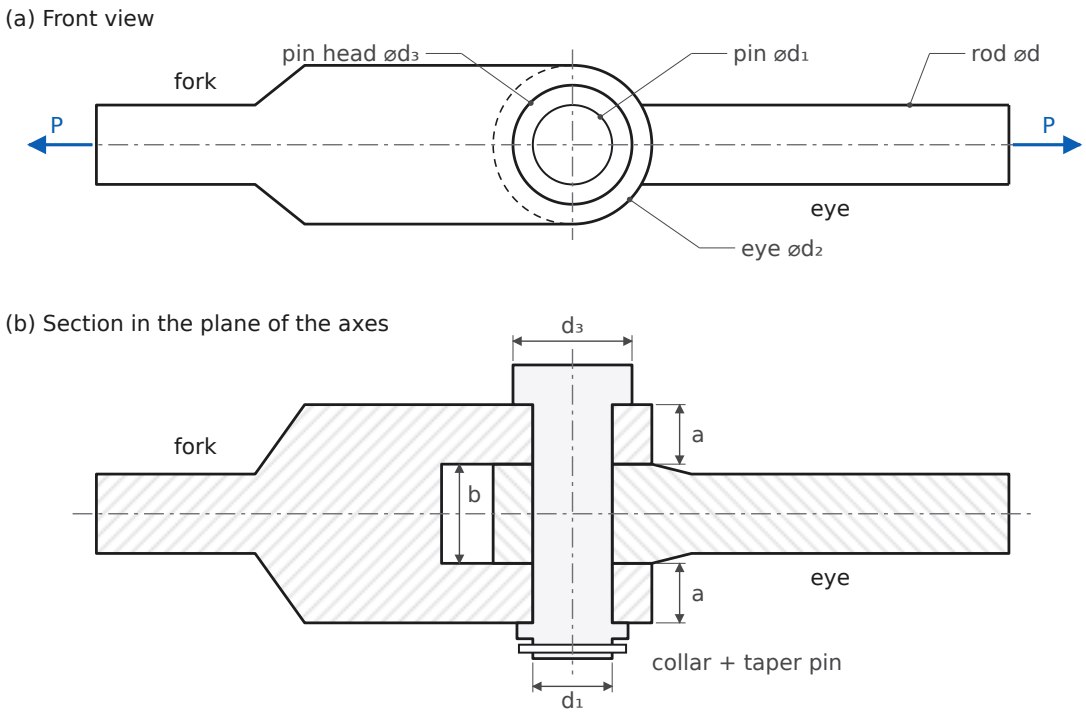

Fig. 4.4 Knuckle joint: (a) front view, (b) section showing the fork jaws (a), the eye (b) and the pin

1. Rod diameter

$$d = \sqrt{\frac{4(25\times10^3)}{\pi(50)}} = 25.2 \;\rightarrow\; d = 28 \text{ mm}$$

2. Pin in double shear

$$d_1 = \sqrt{\frac{2P}{\pi\tau}} = \sqrt{\frac{2(25\times10^3)}{\pi(40)}} = 19.9 \text{ mm}$$

The proportion $d_1 = d = 28$ mm is larger, so take 28 mm for now.

3. Thicknesses

Eye: $b = 1.25d = 35$ mm. Same-thickness condition: $a = b = 35$ mm.

4. Pin in bending

$$M = \frac{P}{2}\left(\frac{b}{4} + \frac{a}{3}\right) = 12\,500\left(\frac{35}{4} + \frac{35}{3}\right) = 2.552\times10^5 \text{ N mm}$$

With $d_1 = 28$: $\sigma_b = \frac{32M}{\pi d_1^3} = 118.4$ MPa > 50, which fails. Required:

$$d_1 = \left(\frac{32M}{\pi\sigma_b}\right)^{1/3} = \left(\frac{32(2.552\times10^5)}{\pi(50)}\right)^{1/3} = 37.3 \;\rightarrow\; d_1 = 38 \text{ mm}$$

Check: $\sigma_b = 47.4$ MPa ✓, $\tau = \frac{25\times10^3}{2\cdot\frac{\pi}{4}(38)^2} = 11.0$ MPa ✓.

5. Eye

$d_2 = 2d = 56$ gives $\tau = \frac{P}{(d_2-d_1)b} = \frac{25\times10^3}{18(35)} = 39.7$ MPa, right at the limit. Take $d_2 = 60$ mm:

$$\sigma_t = \tau = \frac{25\times10^3}{(60-38)(35)} = 32.5 \text{ MPa} \checkmark, \qquad \sigma_c = \frac{25\times10^3}{38(35)} = 18.8 \text{ MPa} \checkmark$$

6. Fork

$$\sigma_t = \tau = \frac{25 \times 10^3}{2(60-38)(35)} = 16.2 \text{ MPa} \checkmark, \qquad \sigma_c = \frac{25 \times 10^3}{2(38)(35)} = 9.4 \text{ MPa} \checkmark$$

7. Remaining proportions

Pin head $d_3 = 1.5d_1 = 57$ mm. Collar and taper pin at the other end. Rod stress is $\frac{25\times10^3}{\frac{\pi}{4}(28)^2} = 40.6$ MPa ✓.

Answer. d = 28, pin d_1 = 38, eye d_2 = 60, pin head d_3 = 57, fork jaw a = eye b = 35 (mm).

Exam tip Making the fork jaws as thick as the eye moves the fork load further out on the pin, so bending, not shear, sets the pin size. Say this in one line. It is why the usual proportions are a = 0.75d and b = 1.25d.

Q 4.5 AE302 May 2024 Q2 — 8 marks

Design a knuckle joint for connecting two medium carbon steel rods to withstand a tensile load of 250 kN. The permissible stresses in tension, shear and crushing are 180 MPa, 100 MPa and 220 MPa respectively.

SOLUTION

Assumed Bhandari's knuckle-joint proportions (Fig. 4.4). Permissible bending stress for the pin is $\sigma_b = \sigma_t = 180$ MPa.

1. Rod diameter

$$d = \sqrt{\frac{4(250 \times 10^3)}{\pi(180)}} = 42.05 \;\rightarrow\; d = 45 \text{ mm} \qquad (\sigma_t = 157.2 \text{ MPa})$$

2. Proportions

$d_1 = d = 45$, $d_2 = 2d = 90$, $d_3 = 1.5d = 67.5 \rightarrow 68$, $a = 0.75d = 33.75 \rightarrow 34$, $b = 1.25d = 56.25 \rightarrow 56$ mm.

3. Pin: shear and bending

$$\tau = \frac{250 \times 10^3}{2 \cdot \frac{\pi}{4}(45)^2} = 78.6 \text{ MPa} \checkmark$$

$$M = \frac{P}{2}\left(\frac{b}{4} + \frac{a}{3}\right) = 125\,000\left(\frac{56}{4} + \frac{34}{3}\right) = 3.167 \times 10^6 \text{ N mm}$$

$$\sigma_b = \frac{32(3.167 \times 10^6)}{\pi(45)^3} = 354 \text{ MPa} > 180 \;\Rightarrow\; d_1 = \left(\frac{32M}{\pi(180)}\right)^{1/3} = 56.4 \;\rightarrow\; d_1 = 60 \text{ mm}$$

Check with $d_1 = 60$: $\sigma_b = 149.3$ MPa ✓, $\tau = 44.2$ MPa ✓. Pin head $d_3 = 1.5d_1 = 90$ mm.

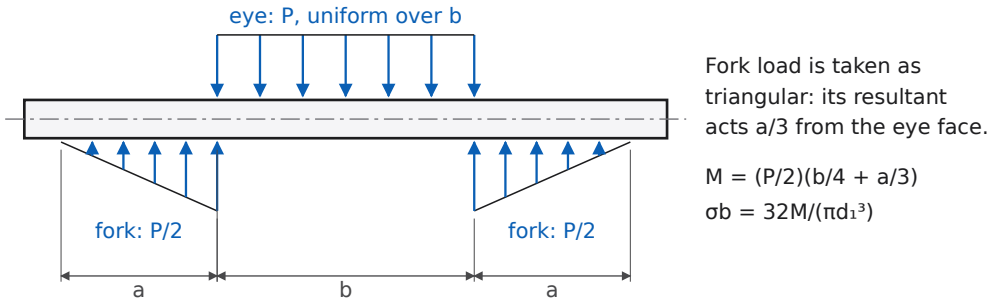

Fig. 4.5 Loading on the knuckle pin (Bhandari's assumption)

4. Eye

With the larger pin, $d_2 = 90$ leaves too little metal. From eye shear, $d_2 \geq d_1 + \frac{P}{b\tau} = 60 + \frac{250\times10^3}{56(100)} = 104.6$, so $d_2 = 110$ mm.

$$\sigma_t = \tau = \frac{250 \times 10^3}{(110-60)(56)} = 89.3 \text{ MPa} \checkmark, \qquad \sigma_c = \frac{250 \times 10^3}{60(56)} = 74.4 \text{ MPa} \checkmark$$

5. Fork

$$\sigma_t = \tau = \frac{250 \times 10^3}{2(110-60)(34)} = 73.5 \text{ MPa} \checkmark, \qquad \sigma_c = \frac{250 \times 10^3}{2(60)(34)} = 61.3 \text{ MPa} \checkmark$$

Answer. d = 45, pin d_1 = 60, eye outer d_2 = 110, pin head d_3 = 90, fork jaw a = 34, eye b = 56 (mm).

5 Riveted and welded joints

Boiler joints by the IBR/Bhandari procedure, eccentrically loaded riveted brackets, and an eccentrically loaded fillet weld. A triple-riveted boiler joint is set in almost every sitting.

KEY FORMULAS

- Shell plate: $t = \dfrac{pD}{2\sigma_t \eta} + 1.5$ mm (corrosion allowance). Rivet hole: $d = 6\sqrt{t}$ (Unwin), rounded up to a standard hole size.
- Strength per pitch length: tearing $(p-d)t\sigma_t$; single shear $\frac{\pi}{4}d^2\tau$; double shear $1.875 \times \frac{\pi}{4}d^2\tau$ (IBR); crushing $dt\sigma_c$ per rivet; solid plate $pt\sigma_t$.
- Maximum pitch (IBR): $p_{max} = Ct + 41.28$ mm. Margin $m = 1.5d$.
- Distance between rows: zig-zag rows with equal numbers $0.33p + 0.67d$; chain $2d$. Outer rows with half the rivets and zig-zag inner rows: $0.2p + 1.15d$ (outer), $0.165p + 0.67d$ (inner). Here p is the outer-row pitch.
- Butt straps: equal $t_1 = 0.625t$; unequal $t_1 = 0.75t$ (wide, inside) and $t_2 = 0.625t$ (narrow, outside). Minimum 10 mm.
- Efficiency: $\eta = \dfrac{\text{least strength per pitch}}{pt\sigma_t}$
- Eccentric rivet group: primary $P' = P/n$; secondary $P_i'' = \dfrac{Pe\,r_i}{\sum r^2}$, perpendicular to r_i; add the two as vectors.
- Fillet weld all round a $b \times d$ section, with load P at arm e: $A = 2t(b+d)$, $Z = t\left(bd + \frac{d^2}{3}\right)$, $\tau_{res} = \sqrt{\sigma_b^2 + \tau^2}$, $t = 0.707h$.

Rivets per pitch length	1	2	3	4	5
C, lap joint	1.31	2.62	3.47	4.14	–
C, butt joint, single strap	1.53	3.06	4.05	–	–
C, butt joint, double strap	1.75	3.50	4.63	5.52	6.00

Assumed IS 1929 rivet/hole diameters (mm): 20/21, 22/23, 24/25, 27/28.5, 30/31.5, 33/34.5, 36/37.5. In the boiler designs below, d is the hole diameter. The rivet fills the hole, so the IBR uses the hole diameter for strength.

Boiler joints

Q 5.1 ME304 End-sem May 2023 Q7 · ME304 End-sem May 2024 Q5(a) — 8 marks (4 in May 2024)

Design a triple riveted butt joint with rivets arranged in zig-zag fashion having five rivets in one pitch length and with double cover plates of equal widths for a boiler drum. The thickness of the main plate is 15 mm. The allowable tensile stress, compressive stress and shearing stress of the steel used are 75 MPa, 100 MPa and 58 MPa respectively. The efficiency of the joint should not be less than 75%. Assume that the boiler plate and rivets are made of the same steel.

May 2024 wording: "Design a triple riveted butt *and circumferential* joint … for a boiler drum subjected to a pressure of 1.0 MPa …" (no drum diameter given; see the end).

SOLUTION

Arrangement: five rivets per pitch, 1 + 2 + 2. The outer row has one rivet per pitch p; the middle and inner rows have two each, at pitch $p/2$, staggered. Both straps cover all rows, so every rivet is in double shear.

1. Rivet diameter

$$d = 6\sqrt{t} = 6\sqrt{15} = 23.24 \text{ mm} \;\rightarrow\; \text{hole } d = 25 \text{ mm (rivet 24 mm)}$$

2. Strength of one rivet

$$R_s = 1.875 \times \frac{\pi}{4}(25)^2(58) = 53\,383 \text{ N (double shear)}, \qquad R_c = dt\sigma_c = 25(15)(100) = 37\,500 \text{ N}$$

3. Pitch

Shear strength of 5 rivets = tearing strength:

$$(p - 25)(15)(75) = 5(53\,383) \;\Rightarrow\; p = 262.3 \text{ mm}$$

$$p_{max} = Ct + 41.28 = 6.00(15) + 41.28 = 131.3 \text{ mm} \;\Rightarrow\; p = 130 \text{ mm (inner rows } p/2 = 65 \text{ mm)}$$

4. Distance between rows and margin

Outer to middle row: $0.2p + 1.15d = 0.2(130) + 1.15(25) = 54.75 \rightarrow 55$ mm.

Middle to inner row: $0.165p + 0.67d = 21.45 + 16.75 = 38.2 \rightarrow 40$ mm. The diagonal $\sqrt{32.5^2 + 40^2} = 51.5 \text{ mm} > 2d$ ✓.

Margin: $m = 1.5d = 37.5 \rightarrow 38$ mm.

5. Cover plates

$t_1 = 0.625t = 9.4 \rightarrow 10$ mm (IBR minimum 10 mm).

6. Efficiency

Solid plate strength per pitch: $pt\sigma_t = 130(15)(75) = 146\,250$ N. Each rivet resists $\min(R_s, R_c) = 37\,500$ N, because crushing is weaker here.

Mode	Strength per pitch (N)	η
Tearing at outer row: $(p-d)t\sigma_t$	118 125	**80.8%**
Shearing of 5 rivets: $5R_s$	266 913	182.5%
Crushing of 5 rivets: $5R_c$	187 500	128.2%
Tearing at middle row + outer rivet: $(p-2d)t\sigma_t + R_c$	127 500	87.2%
Tearing at inner row + outer and middle rivets: $(p-2d)t\sigma_t + 3R_c$	202 500	138.5%

$\eta = 80.8\% > 75\%$ ✓

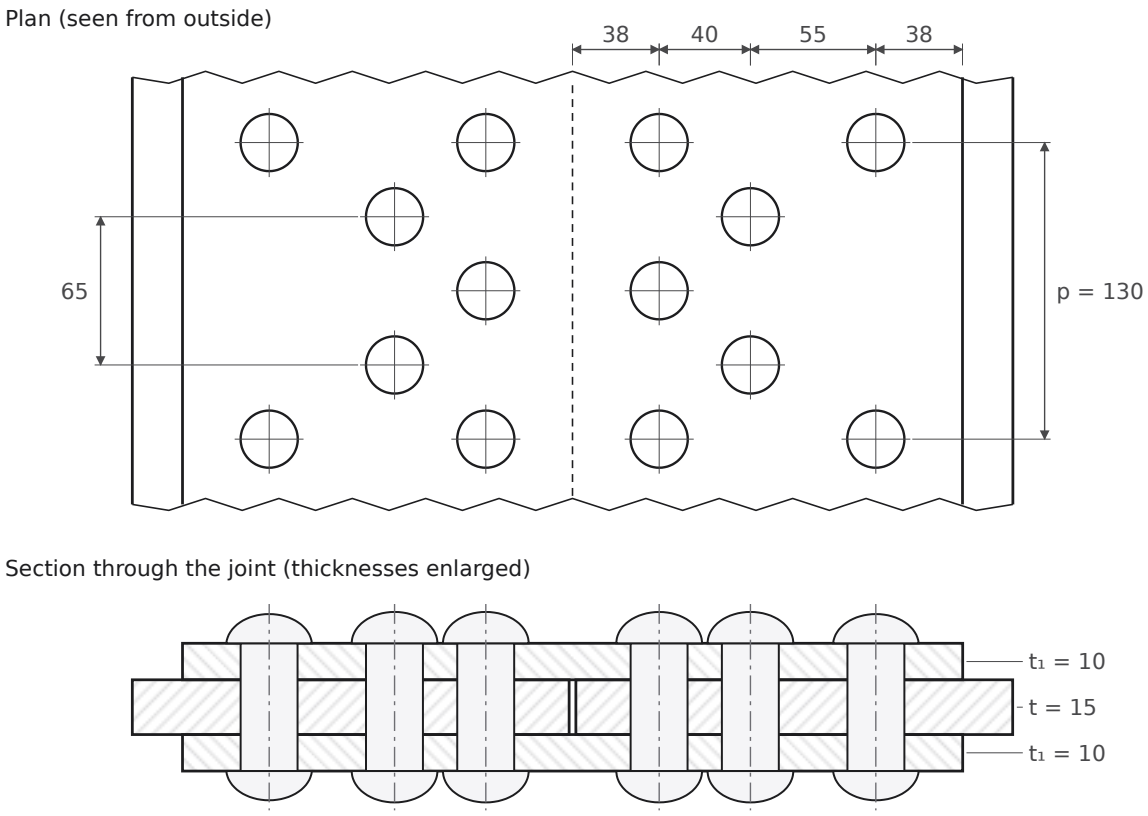

Fig. 5.1 Triple-riveted zig-zag double-strap butt joint, 1 + 2 + 2 rivets per pitch (mm)

Answer. Hole d = 25 (rivet 24), p = 130 (outer), 65 (inner rows), row spacing 55 (outer to middle) and 40 (middle to inner), m = 38, cover plates 2 × 10 mm, η = 80.8%.

May 2024 sitting: pressure 1.0 MPa and the circumferential joint

No drum diameter is given. The longitudinal joint above is adequate for drums up to

$$D \le \frac{2\sigma_t \eta (t - 1.5)}{p} = \frac{2(75)(0.808)(13.5)}{1.0} = 1636 \text{ mm}$$

Assumed D = 1.5 m for the circumferential joint. It is a lap joint using the same t = 15 mm and hole d = 25 mm, with rivets in single shear.

Number of rivets: the end thrust equals the rivet shear strength, $\frac{\pi}{4} D^2 p = n \frac{\pi}{4} d^2 \tau$, so

$$n = \left(\frac{D}{d}\right)^2 \frac{p}{\tau} = \left(\frac{1500}{25}\right)^2 \frac{1.0}{58} = 62.1$$

The axial stress is half the hoop stress, so the circumferential seam needs only about 62% of the longitudinal efficiency: $\eta_c \approx 0.62(0.808) = 0.50$, which gives $p_1 \ge d/(1 - \eta_c) = 50$ mm. Take a single row with $p_1 = 70$ mm. Then $\pi(D + t)/p_1 = \pi(1515)/70 = 68$ rivets, which is at least 62 ✓. $\eta_c = (70 - 25)/70 = 64\%$ ✓. Overlap $= 3d = 75$ mm.

Circumferential joint (D = 1.5 m assumed). Single-riveted lap joint, 68 rivets (hole 25 mm) at 70 mm pitch, overlap 75 mm.

Q 5.2 ME262 May/June 2019 Q2 — 8 marks

Design a longitudinal butt joint only for a boiler drum with internal diameter 1500 mm and internal pressure of 1.25 MPa. Assume that the arrangement of rivets is chain triple riveted with equal cover plates for the joint. The allowable stresses of the material in tension, compression and shear are 75

MPa, 110 MPa and 60 MPa respectively. Assume that the plate material is the same as that of the rivet.

SOLUTION

Assumed Efficiency η = 80% for a triple-riveted butt joint, to be verified at the end.

Chain triple riveting has three rows at the same pitch, so there are 3 rivets per pitch, all in double shear. From the table, $C = 4.63$.

1. Plate thickness

$$t = \frac{pD}{2\sigma_t \eta} + 1.5 = \frac{1.25(1500)}{2(75)(0.80)} + 1.5 = 15.63 + 1.5 = 17.1 \ \rightarrow \ t = 18 \text{ mm}$$

2. Rivet diameter

$$d = 6\sqrt{18} = 25.46 \ \rightarrow \ \text{hole } d = 28.5 \text{ mm (rivet } 27 \text{ mm)}$$

3. Pitch

$$R_s = 1.875 \times \frac{\pi}{4}(28.5)^2(60) = 71\,768 \text{ N}, \qquad R_c = 28.5(18)(110) = 56\,430 \text{ N}$$

$$(p - 28.5)(18)(75) = 3(71\,768) \ \Rightarrow \ p = 188.0 \text{ mm}; \qquad p_{max} = 4.63(18) + 41.28 = 124.6 \text{ mm}$$

So $p = 124$ mm.

4. Rows, margin, straps

Chain riveting: row spacing $\geq 2d = 57$, take 60 mm. Margin $m = 1.5d = 42.75 \rightarrow 43$ mm. Equal straps $t_1 = 0.625(18) = 11.25 \rightarrow 12$ mm.

5. Efficiency

Solid plate: $124(18)(75) = 167\,400$ N.

Mode	Strength (N)	η
Tearing at outer row: $(p-d)t\sigma_t$	128 925	**77.0%**
Shearing of 3 rivets	215 305	128.6%
Crushing of 3 rivets	169 290	101.1%
Tearing at middle row + outer rivet (crushing, 56 430)	185 355	110.7%

$\eta = 77.0\%$. Re-check the thickness with this value: $t = \frac{1.25(1500)}{2(75)(0.770)} + 1.5 = 17.7$ mm < 18 ✓.

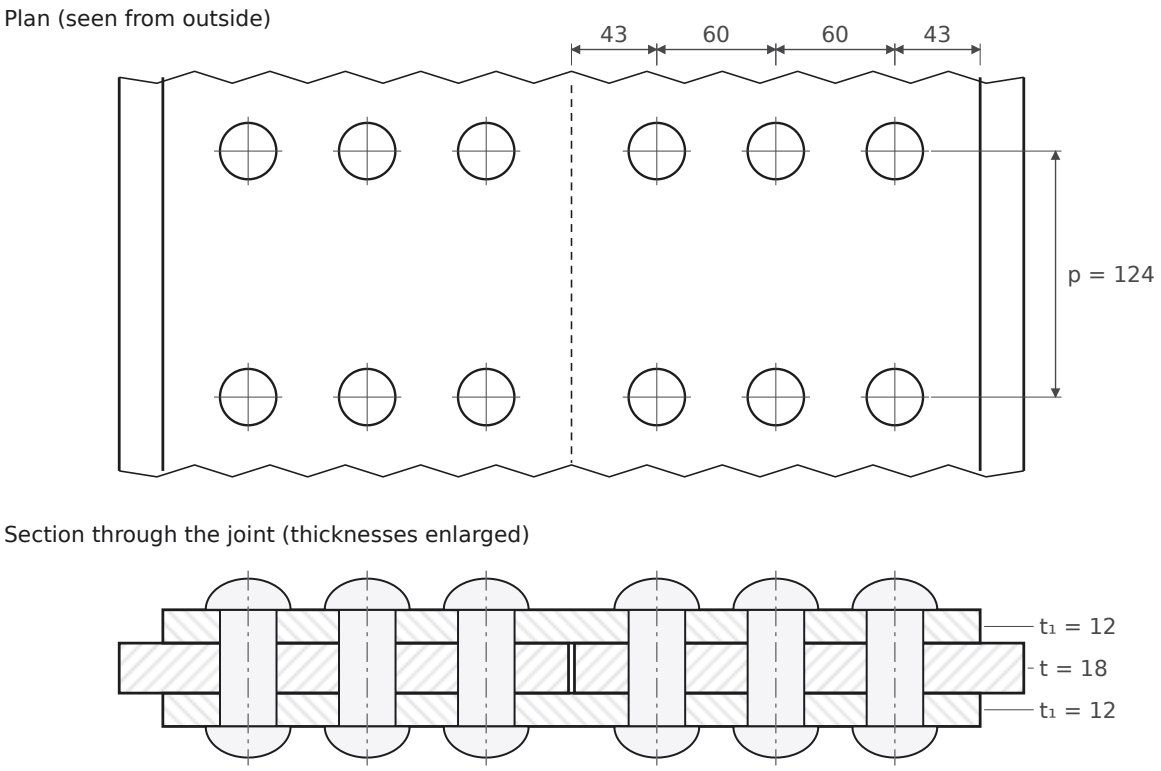

Fig. 5.2 Chain triple-riveted double-strap butt joint (mm)

Answer. t = 18, hole d = 28.5 (rivet 27), p = 124, row spacing 60, m = 43, straps 2 × 12 mm, η = 77.0%.

Exam tip For chain riveting the IBR maximum pitch, not the strength equation, nearly always sets p. Always compute p_{max} before using the pitch from shear = tearing.

Q 5.3

ME-313 May 2019 Q3 · CME-403 Nov 2024 Q4 (D = 1.25 m) · ME-313 (2nd paper) Q3 (variant) — 14 marks (8 in CME-403)

Design a triple riveted double strap butt joint with unequal covers for the longitudinal joint of a boiler shell having a 1.5 m internal diameter to withstand a maximum pressure of 2.5 N/mm². Assume that the shell plate and rivets are made of C-20 steel having the following allowable stresses: σ_t = 86 N/mm², τ = 52 N/mm², σ_c = 129 N/mm². Also sketch the joint.

CME-403 Nov 2024: same data with D = 1.25 m. ME-313 (2nd paper): D = 1.5 m, 2.4 N/mm², σ_t = 80, τ = 50, σ_c = 120 N/mm². Both are solved at the end.

SOLUTION

Arrangement (Fig. 5.3): 1 + 2 + 2 rivets per pitch, zig-zag. The **wide strap** is inside and covers all three rows. The **narrow strap** is outside and covers only the middle and inner rows. So the outer-row rivet is in **single shear** and the other four are in double shear. With 5 rivets per pitch, $C = 6.00$.

Assumed η = 75%. With unequal straps the outer rivet is in single shear, and the "tearing at the middle row + shearing of the outer rivet" mode limits η to about 75% (verified below).

1. Plate thickness

$$t = \frac{2.5(1500)}{2(86)(0.75)} + 1.5 = 29.07 + 1.5 = 30.6 \;\rightarrow\; t = 31 \text{ mm}$$

2. Rivet diameter

$$d = 6\sqrt{31} = 33.4 \;\rightarrow\; \text{hole } d = 34.5 \text{ mm (rivet 33 mm)}$$

3. Rivet strengths

$$R_{s1} = \frac{\pi}{4}(34.5)^2(52) = 48\,611 \text{ N}, \quad R_{s2} = 1.875R_{s1} = 91\,145 \text{ N}, \quad R_c = 34.5(31)(129) = 137\,966 \text{ N}$$

Shear strength per pitch: $R_{s1} + 4R_{s2} = 413\,191$ N.

4. Pitch

Shear = tearing: $(p - 34.5)(31)(86) = 413\,191$, so $p = 189.5$ mm. Also $p_{max} = 6.00(31) + 41.28 = 227.3$ mm. Check the combined mode at $p = 190$: $\dfrac{(190 - 69)(31)(86) + 48\,611}{190(31)(86)} = 73.3\% < 75\%$ ✗. A larger pitch is needed. Equating the shear strength to (tearing at the middle row + outer rivet):

$$R_{s1} + 4R_{s2} = (p - 2d)t\sigma_t + R_{s1} \;\Rightarrow\; p = 2d + \frac{4R_{s2}}{t\sigma_t} = 69 + \frac{364\,580}{2666} = 205.8 \text{ mm}$$

So $p = 205$ mm ($\le p_{max}$ ✓). The inner rows are at $p/2 = 102.5$ mm.

5. Distance between rows and margin

Outer to middle: $0.2p + 1.15d = 41 + 39.7 = 80.7 \rightarrow 81$ mm. Middle to inner: $0.165p + 0.67d = 33.8 + 23.1 = 56.9 \rightarrow 57$ mm. Margin $m = 1.5d = 51.75 \rightarrow 52$ mm.

6. Straps

Wide (inside): $t_1 = 0.75t = 23.25 \rightarrow 24$ mm. Narrow (outside): $t_2 = 0.625t = 19.4 \rightarrow 20$ mm.

7. Efficiency

Solid plate: $205(31)(86) = 546\,530$ N.

Mode	Strength (N)	η
Tearing at outer row: $(p - d)t\sigma_t$	454 553	83.2%
Shearing of all rivets: $R_{s1} + 4R_{s2}$	413 191	75.6%
Crushing of 5 rivets	689 828	126.2%
Tearing at middle row + outer rivet: $(p - 2d)t\sigma_t + R_{s1}$	411 187	**75.2%**
Tearing at inner row + outer and middle rivets: $(p - 2d)t\sigma_t + R_{s1} + 2R_{s2}$	593 477	108.6%

$\eta = 75.2\% \ge 75\%$ assumed ✓. Required t at this efficiency is 30.5 mm, which is less than 31 ✓.

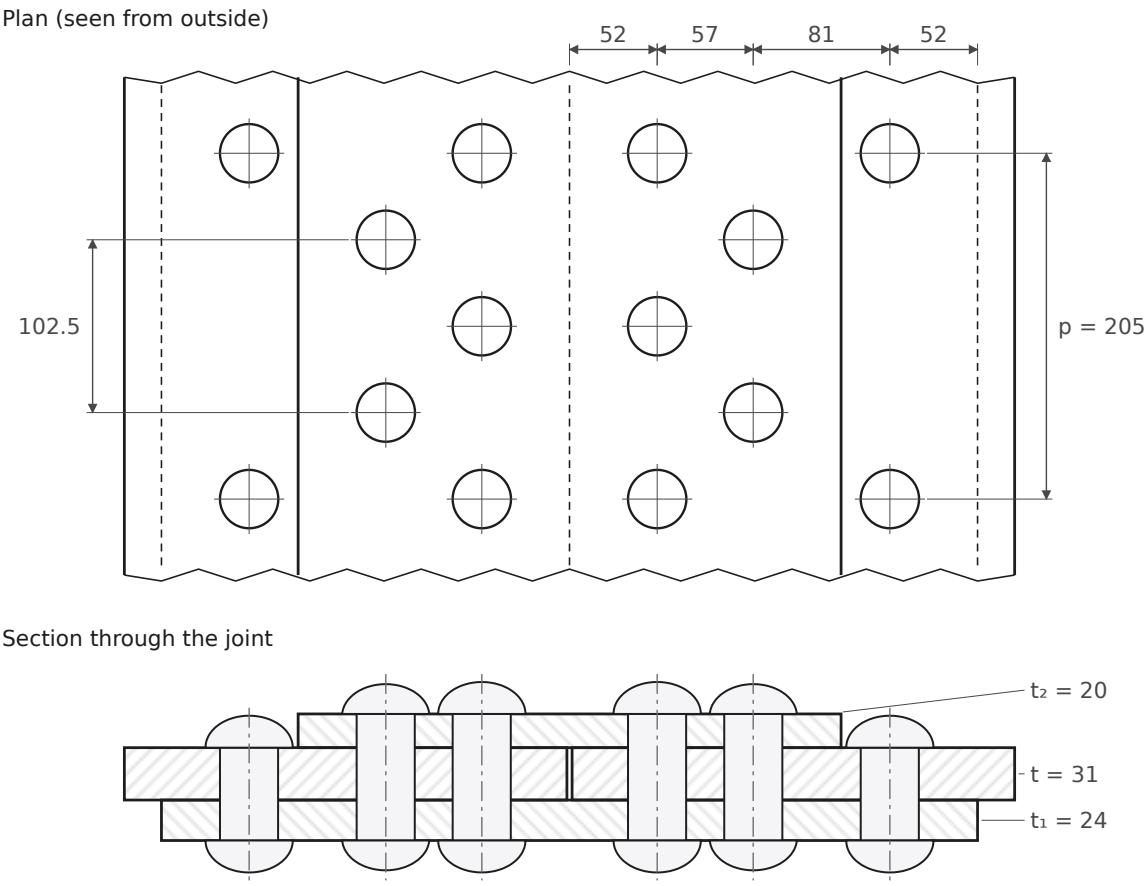

Fig. 5.3 Triple-riveted double-strap butt joint with unequal straps. The outer-row rivets pass through the main plate and the wide inside strap only (mm).

> **Answer (D = 1.5 m).** t = 31, hole d = 34.5 (rivet 33), p = 205 (outer), 102.5 (inner rows), row spacing 81 and 57, m = 52, wide strap 24 mm (inside), narrow strap 20 mm (outside), η = 75.2%.

Variant: D = 1.25 m (CME-403 Nov 2024)

$t = \frac{2.5(1250)}{2(86)(0.75)} + 1.5 = 25.7 \to 26$; $d = 6\sqrt{26} = 30.6 \to$ hole 31.5 (rivet 30). $R_{s1} = 40\,524$, $R_{s2} = 75\,983$ N. The balancing pitch is $2d + 4R_{s2}/(t\sigma_t) = 198.9$, but $p_{max} = 6(26) + 41.28 = 197.3$, so $p = 197$. Efficiencies: tearing 84.0%, shearing 78.2%, middle-row combined 77.2%, so $\eta = 77.2\%$ (needs $t = 25.0 < 26$ ✓). Rows $0.2p + 1.15d = 75.6 \to 76$ and $0.165p + 0.67d = 53.6 \to 54$. $m = 47.25 \to 48$. Straps $0.75t = 19.5 \to 20$ and $0.625t = 16.25 \to 17$.

> **Answer (1.25 m).** t = 26, hole 31.5 (rivet 30), p = 197, rows 76/54, m = 48, straps 20 (inside) and 17 (outside), η = 77.2%.

Variant: 2.4 N/mm², σ_t = 80, τ = 50, σ_c = 120 (ME-313 2nd paper)

$t = \frac{2.4(1500)}{2(80)(0.75)} + 1.5 = 31.5 \to 32$; $d = 6\sqrt{32} = 33.9 \to$ hole 34.5 (rivet 33). $R_{s1} = 46\,741$, $R_{s2} = 87\,639$ N. Shear = tearing gives 189.7; the balancing pitch is 205.9, so $p = 205$ ($p_{max} = 233.3$). Efficiencies: tearing 83.2%, shearing 75.7%, middle-row combined 75.2%, so $\eta = 75.2\%$ (needs $t = 31.4 < 32$ ✓). Rows 81/57, $m = 52$, straps $0.75t = 24$ and $0.625t = 20$.

> **Answer (2.4 MPa).** t = 32, hole 34.5 (rivet 33), p = 205, rows 81/57, m = 52, straps 24 (inside) and 20 (outside), η = 75.2%.

Exam tip With unequal straps, do not stop at "shear = tearing". The combined mode (tearing at the second row + single shear of the outer rivet) is usually the weakest. Checking it and adjusting p is what separates a full-marks answer.

Q 5.4 AE302 May 2023 Q2 — 8 marks

Design a quadruple riveted (zig-zag type) double strap butt joint with unequal straps for joining 25 mm thick medium carbon steel plates.

SOLUTION

Assumed No stresses are given. Take σ_t = 80 MPa, τ = 60 MPa and σ_c = 120 MPa for medium carbon steel plates and rivets. Arrangement 1 + 2 + 2 + 2 = 7 rivets per pitch, zig-zag. The narrow outside strap covers the three inner rows; the outermost row (1 per pitch) is on the wide inside strap only, in single shear. For p_{max}, use C = 6.00 (the IBR table stops at 5 rivets per pitch; the largest value is used, which is conservative).

1. Rivet diameter

$$d = 6\sqrt{25} = 30 \text{ mm} \;\rightarrow\; \text{hole } d = 31.5 \text{ mm (rivet 30 mm)}$$

2. Rivet strengths

$$R_{s1} = \frac{\pi}{4}(31.5)^2(60) = 46\,759 \text{ N}, \quad R_{s2} = 1.875R_{s1} = 87\,673 \text{ N}, \quad R_c = 31.5(25)(120) = 94\,500 \text{ N}$$

3. Pitch for maximum efficiency

Shear per pitch: $R_{s1} + 6R_{s2} = 572\,794$ N. Equal strength in tearing gives $p = 31.5 + \frac{572\,794}{25(80)} = 317.9$ mm. But

$$p_{max} = 6.00(25) + 41.28 = 191.3 \text{ mm}$$

The efficiency rises with pitch, so take the largest allowed value: $p = 190$ mm (inner rows at 95 mm).

4. Efficiency

Solid plate: $190(25)(80) = 380\,000$ N. Rows are numbered from the outside.

Mode	Strength (N)	η
Tearing at row 1 (outer): $(p-d)t\sigma_t$	317 000	83.4%
Shearing of all 7 rivets	572 794	150.7%
Crushing of 7 rivets	661 500	174.1%
Tearing at row 2 + row-1 rivet: $(p-2d)t\sigma_t + R_{s1}$	300 759	**79.1%**
Tearing at row 3 + rows 1–2: $(p-2d)t\sigma_t + R_{s1} + 2R_{s2}$	476 105	125.3%
Tearing at row 4 + rows 1–3: $(p-2d)t\sigma_t + R_{s1} + 4R_{s2}$	651 451	171.4%

$\eta = 79.1\%$. The upper limit is $(p-d)/p = 83.4\%$, set by the IBR pitch limit.

5. Rows, margin, straps

Row 1 to row 2: $0.2p + 1.15d = 38 + 36.2 = 74.2 \rightarrow 75$ mm. Between the zig-zag inner rows: $0.165p + 0.67d = 31.4 + 21.1 = 52.5 \rightarrow 53$ mm. Margin $m = 1.5d = 47.25 \rightarrow 48$ mm.

Wide strap (inside) $t_1 = 0.75t = 18.75 \rightarrow 19$ mm. Narrow strap (outside) $t_2 = 0.625t = 15.6 \rightarrow 16$ mm.

Capacity: $pD = 2\sigma_t\eta(t-1.5) = 2(80)(0.791)(23.5) = 2976$ N/mm. For example, a 1.5 m drum at up to 1.98 MPa.

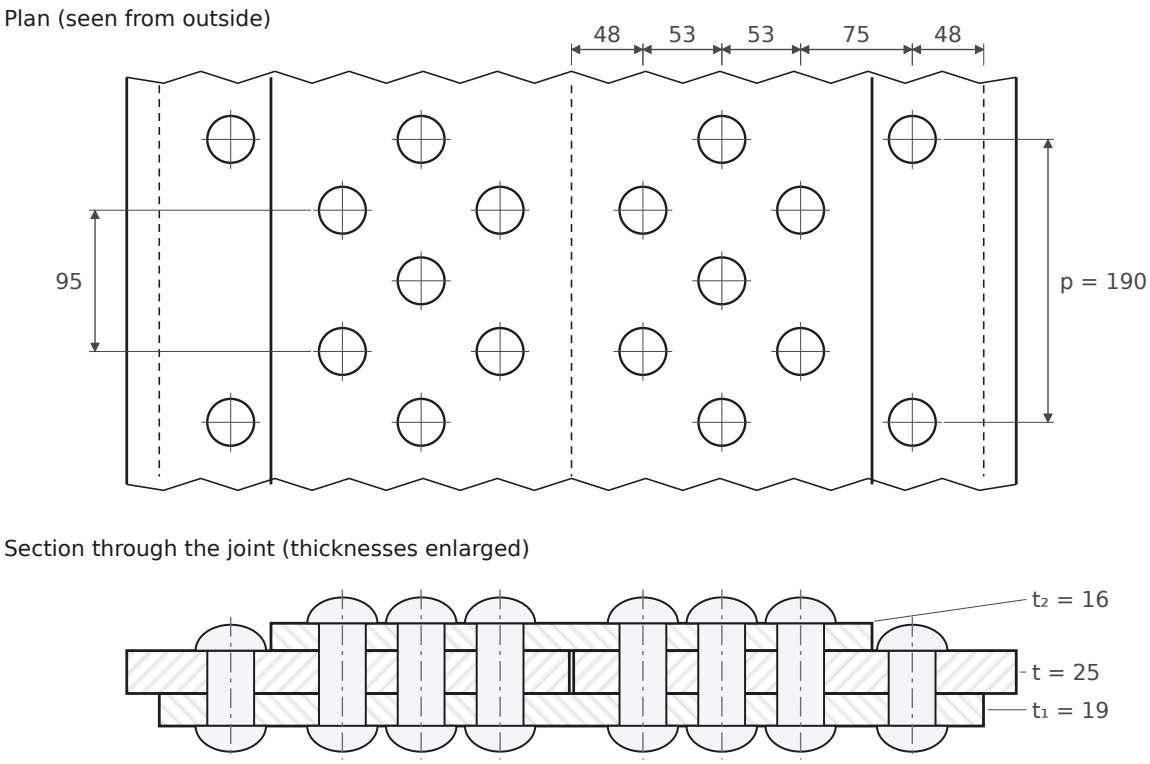

Fig. 5.4 Quadruple-riveted zig-zag butt joint with unequal straps, 1 + 2 + 2 + 2 rivets per pitch (mm)

Answer. Hole d = 31.5 (rivet 30), p = 190 (outer row), 95 (inner rows), row spacing 75/53/53, m = 48, straps 19 mm (wide, inside) and 16 mm (narrow, outside), η = 79.1%.

Exam tip The rivets here are much stronger than the plate (shear η = 151%). If the examiner allows departing from Unwin's formula, a 25 mm hole raises η to about 81%. State the assumed stresses clearly at the start: that is where the marks for "assume suitable data" are.

Eccentrically loaded riveted joints

Q 5.5 AE-311 Jul 2021 Q3(a) 7 marks

Determine the diameter of the rivets for a riveted joint subjected to an eccentric force of 75 kN as shown in Fig. 5.5. Assume that all the rivets are identical.

SOLUTION

Assumed Permissible shear stress for the rivets is τ = 60 MPa (none is given). From the original figure, the load line passes through rivet 2.

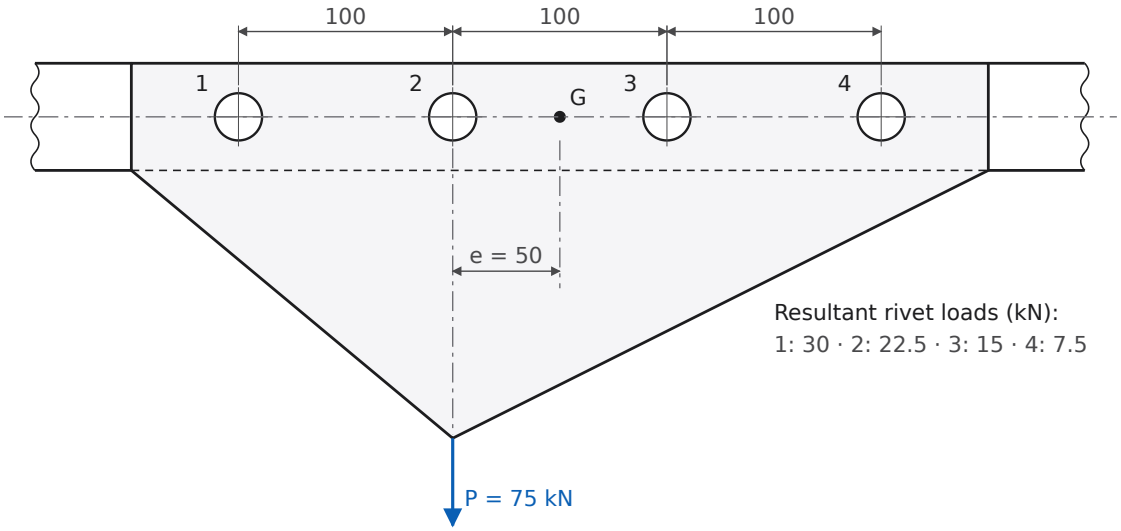

Fig. 5.5 Bracket with four rivets in a row (redrawn from the paper; mm)

1. Centroid and eccentricity

The rivets are at 0, 100, 200 and 300 mm, so the centroid G is at 150 mm, midway between rivets 2 and 3. The load acts at rivet 2: $e = 150 - 100 = 50$ mm. Moment $M = Pe = 75(50) = 3750$ kN mm, anticlockwise.

2. Primary (direct) shear

$$P' = \frac{75}{4} = 18.75 \text{ kN (downward) on each rivet}$$

3. Secondary shear

$r_1 = r_4 = 150$ mm and $r_2 = r_3 = 50$ mm, so $\sum r^2 = 2(150^2 + 50^2) = 50\,000 \text{ mm}^2$. The rivets lie on a horizontal line, so the secondary forces are vertical: downward on rivets 1 and 2, upward on rivets 3 and 4.

$$P_1'' = \frac{P e\, r_1}{\sum r^2} = \frac{3750(150)}{50\,000} = 11.25 \text{ kN}, \qquad P_2'' = \frac{3750(50)}{50\,000} = 3.75 \text{ kN}$$

4. Resultant on each rivet

Rivet	1	2	3	4
Primary (kN, ↓)	18.75	18.75	18.75	18.75
Secondary (kN)	11.25 ↓	3.75 ↓	3.75 ↑	11.25 ↑
Resultant (kN)	**30.0**	22.5	15.0	7.5

5. Rivet diameter

Rivet 1 is the most heavily loaded:

$$\frac{\pi}{4} d^2 (60) = 30 \times 10^3 \;\Rightarrow\; d = 25.2 \text{ mm} \;\rightarrow\; d = 27 \text{ mm (IS 1929)}$$

Check: $\tau = \frac{30\,000}{\frac{\pi}{4}(27)^2} = 52.4$ MPa < 60 ✓.

> **Answer.** Maximum rivet load 30 kN (rivet 1). Rivet diameter 27 mm (with τ = 60 MPa).

Q 5.6 AE-311 Jul 2021 Q5 — 14 marks

A bracket in the form of a plate is fitted to a column by means of four rivets A, B, C and D as shown in Fig. 5.6. E is the midpoint of BC. A load of 100 kN is applied at a horizontal distance of 150 mm from E. Determine the diameter of the rivets and the width of the plate.

SOLUTION

Assumed Rivets: τ = 60 MPa. Bracket plate: permissible bending (normal) stress 100 MPa and crushing 120 MPa. The 240 mm depth of the plate along AD is fixed by the figure, so "width of the plate" is read as the plate thickness at the rivet line. As drawn in the paper, the 100 kN load acts at F (level with E) at 30° to the horizontal, pushing down and towards the column. If the arrow is reversed, A becomes the critical rivet and every magnitude is unchanged.

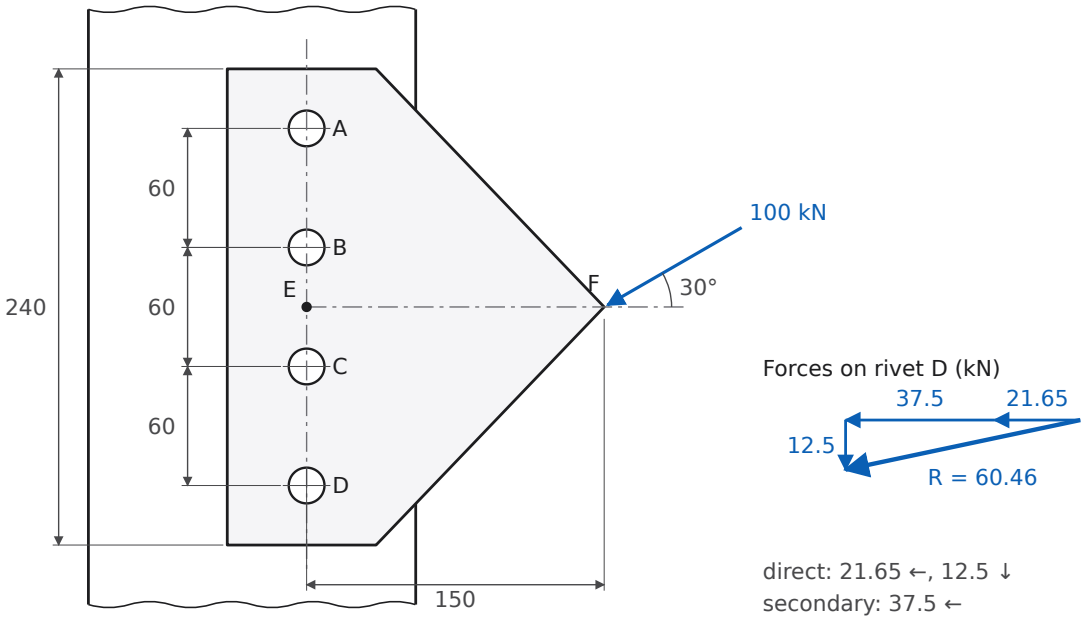

Fig. 5.6 Bracket plate with rivets A–D (redrawn; mm) and the force polygon for the critical rivet D

1. Resolve the load at F

$$P_x = 100\cos 30^\circ = 86.6 \text{ kN (towards the column)}, \qquad P_y = 100\sin 30^\circ = 50 \text{ kN (downward)}$$

2. Moment about the centroid E

E is the centroid of the four rivets. P_x passes through E (F is level with E), so only P_y gives a moment:

$$M = P_y \times 150 = 50(150) = 7500 \text{ kN mm (clockwise)}$$

3. Primary shear (each rivet)

$86.6/4 = 21.65$ kN towards the column (←) and $50/4 = 12.5$ kN downward (↓).

4. Secondary shear

$r_A = r_D = 90$ mm and $r_B = r_C = 30$ mm, so $\sum r^2 = 2(90^2 + 30^2) = 18\,000 \text{ mm}^2$. The rivets are on a vertical line, so the secondary forces are horizontal. The clockwise moment pushes the upper rivets away from the column (→) and the lower rivets towards it (←).

$$P''_{A,D} = \frac{7500(90)}{18\,000} = 37.5 \text{ kN}, \qquad P''_{B,C} = \frac{7500(30)}{18\,000} = 12.5 \text{ kN}$$

5. Resultants

Rivet	Horizontal (kN)	Vertical (kN)	Resultant (kN)
A	$-21.65 + 37.5 = 15.85$	12.5 ↓	20.19
B	$-21.65 + 12.5 = -9.15$	12.5 ↓	15.49
C	$-21.65 - 12.5 = -34.15$	12.5 ↓	36.37
D	$-21.65 - 37.5 = -59.15$	12.5 ↓	**60.46**

$$R_D = \sqrt{59.15^2 + 12.5^2} = 60.46 \text{ kN}$$

6. Rivet diameter

$$\frac{\pi}{4} d^2 (60) = 60.46 \times 10^3 \;\Rightarrow\; d = 35.8 \text{ mm} \;\rightarrow\; d = 36 \text{ mm (hole } 37.5 \text{ mm)}$$

7. Plate at the rivet line AD

The section through AD is 240 mm deep with four 37.5 mm holes at ±30 mm and ±90 mm from E. It carries $M = 7.5 \times 10^6$ N mm and a direct thrust of 86.6 kN. Per mm of thickness t:

$$A_{net} = (240 - 4 \times 37.5)t = 90t, \qquad I_{net} = t\left[\frac{240^3}{12} - 4\frac{37.5^3}{12} - 37.5(2 \times 90^2 + 2 \times 30^2)\right] = 459\,422\,t$$

$$Z_{net} = \frac{I_{net}}{120} = 3828.5\,t, \qquad \frac{86\,600}{90t} + \frac{7.5 \times 10^6}{3828.5\,t} \le 100 \;\Rightarrow\; t \ge 29.2 \text{ mm} \;\rightarrow\; t = 30 \text{ mm}$$

Crushing at D: $\frac{60\,460}{36(30)} = 56.0$ MPa < 120 ✓.

Edge margin: the figure leaves only $(240 - 180)/2 = 30$ mm from A and D to the plate edges, against $1.5d = 54$ mm for 36 mm rivets. Keeping the 1.5d margin needs a plate depth of $180 + 2(1.5)(37.5) = 292.5$, about 295 mm. Alternatively, use stronger rivet steel: τ = 160 MPa (yield 240 MPa, factor of safety 1.5) gives d = 22 mm and t ≈ 19 mm.

> **Answer.** Critical rivet D carries 60.46 kN. Rivet diameter 36 mm (τ = 60 MPa). Bracket plate thickness 30 mm at section AD (σ = 100 MPa), with the plate depth increased to about 295 mm if the 1.5d edge margin is to be kept.

Exam tip Resolve the inclined load first, and notice which component passes through the centroid. Here only the vertical component gives a moment. Show a vector sketch for the critical rivet.

Welded joint

Q 5.7 AE-311 Jul 2021 Q3(b) — 7 marks

A rectangular cross-section is welded to a support by means of fillet welds as shown in Fig. 5.7. Determine the size of the weld.

SOLUTION

Assumed Permissible shear stress in the weld is 70 MPa. The section is 100 mm wide (b) and 150 mm deep (d) and is welded all round. Load 25 kN at 500 mm from the weld.

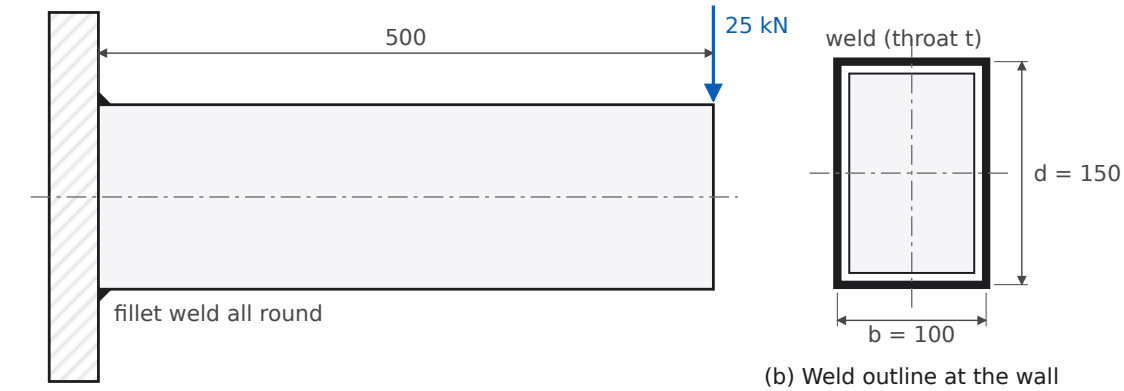

Fig. 5.7 Rectangular section welded all round, loaded as a cantilever (redrawn; mm)

Let t be the throat thickness. The weld is treated as a thin line of width t along the outline.

1. Primary shear

$$A = 2t(b+d) = 2t(100+150) = 500t \text{ mm}^2, \qquad \tau = \frac{25\times10^3}{500t} = \frac{50}{t} \text{ MPa}$$

2. Bending stress

$$M = 25\times10^3(500) = 12.5\times10^6 \text{ N mm}, \qquad Z = t\left(bd + \frac{d^2}{3}\right) = t\left(100(150) + \frac{150^2}{3}\right) = 22\,500t \text{ mm}^3$$

$$\sigma_b = \frac{M}{Z} = \frac{12.5\times10^6}{22\,500t} = \frac{555.6}{t} \text{ MPa}$$

3. Resultant stress and weld size

$$\tau_{res} = \sqrt{\sigma_b^2 + \tau^2} = \frac{\sqrt{555.6^2 + 50^2}}{t} = \frac{557.8}{t} = 70 \;\Rightarrow\; t = 7.97 \text{ mm}$$

$$h = \frac{t}{0.707} = \frac{7.97}{0.707} = 11.3 \text{ mm} \;\rightarrow\; h = 12 \text{ mm}$$

Check with $h = 12$ mm ($t = 8.48$): $\sigma_b = 65.5$, $\tau = 5.9$, $\tau_{res} = 65.7$ MPa < 70 ✓.

Answer. Fillet weld leg h = 12 mm all round (throat 8.5 mm), with a permissible weld stress of 70 MPa.

Exam tip $Z = t(bd + d^2/3)$ comes from $I = t\left(\frac{bd^2}{2} + \frac{d^3}{6}\right)$ for the weld lines, divided by $d/2$. Note that d is the depth in the plane of bending, here 150 mm.

6 Threaded fasteners and power screws

Screw-jack design is one of the most repeated 8-mark questions (four sittings). Eccentrically loaded bolt groups and bolt preload with a gasket make up the rest.

KEY FORMULAS

- Square thread (IS 4694): $d_c = d - p$, $d_m = d - 0.5p$, $\tan\alpha = \dfrac{l}{\pi d_m}$ (single start: $l = p$), $\tan\phi = \mu$
- Torque to raise: $M_t = \dfrac{W d_m}{2}\tan(\phi + \alpha)$; to lower: $M_t' = \dfrac{W d_m}{2}\tan(\phi - \alpha)$; collar (uniform wear): $M_c = \mu_c W \dfrac{D_o + D_i}{4}$
- Efficiency $\eta = \dfrac{\tan\alpha}{\tan(\phi + \alpha)}$; self-locking if $\phi > \alpha$ (then $\eta < 50\%$)
- Screw body: $\sigma_c = \dfrac{4W}{\pi d_c^2}$, $\tau = \dfrac{16 M_t}{\pi d_c^3}$, $\tau_{max} = \sqrt{(\sigma_c/2)^2 + \tau^2}$
- Nut: $z = \dfrac{4W}{\pi S_b (d^2 - d_c^2)}$, $H = zp$; thread shear $\tau_s = \dfrac{W}{\pi d_c t z}$ (screw), $\tau_n = \dfrac{W}{\pi d t z}$ (nut), $t = p/2$
- Johnson column: $P_{cr} = A S_{yt}\left[1 - \dfrac{S_{yt}}{4n\pi^2 E}\left(\dfrac{l}{k}\right)^2\right]$, $k = d_c/4$, $n = 0.25$ for a screw jack (one end fixed, one free)
- Bolt with preload: $P_b = P_i + KP$, $K = \dfrac{k_b}{k_b + k_c}$; $P_i = 2840\,d$ N (d in mm, leak-proof joint)
- Load in plane of bolts: $P_1 = \dfrac{P}{n}$, $P_2 = \dfrac{P e r}{\sum r^2}$, $R = \sqrt{P_1^2 + P_2^2 + 2P_1P_2\cos\theta}$
- Load perpendicular to bolt axes (tilting): $P_{ti} = \dfrac{P e l_i}{2(l_1^2 + l_2^2)}$ (2 bolts per row), $\tau_{max} = \sqrt{(\sigma_t/2)^2 + \tau^2}$

Power screws and the screw jack

Q 6.1 ME304 End-sem May 2024 Q1(c) · ME262 May/June 2019 Q1(d) — 2 marks

How is a power screw different from a fastening screw? How are the threads selected for power transmission?

ME262 2019: Differentiate power screws and threaded fasteners, along with examples of each.

SOLUTION

	Power screw	Threaded fastener
Purpose	Converts rotary motion into linear motion and transmits power (force × speed)	Holds two or more parts together; detachable joint
Thread form	Square, trapezoidal (ISO 30°), Acme (29°), buttress	ISO metric V thread (60°)
Friction	Kept low for high efficiency	Kept high so the joint does not loosen
Motion	Continuous relative motion between screw and nut	No relative motion after tightening
Examples	Screw jack, lead screw of a lathe, vice, press, valve spindle	Bolts and nuts, studs, cap screws, set screws

Selection of thread for power transmission.

- **Square thread**: highest efficiency, no radial (bursting) force on the nut. Used for screw jacks and presses. It is difficult to cut and wear cannot be taken up.

- **Trapezoidal / Acme**: slightly lower efficiency but easy to cut on a lathe, stronger at the root, and a split nut can take up wear. Used for lead screws.
- **Buttress**: for a large force in one direction only (vices, gun breeches). Efficiency is close to square, with the root strength of a V thread.
- Choose a **single-start** thread where self-locking is needed (jack). Choose a **multi-start** thread where speed and efficiency matter more.

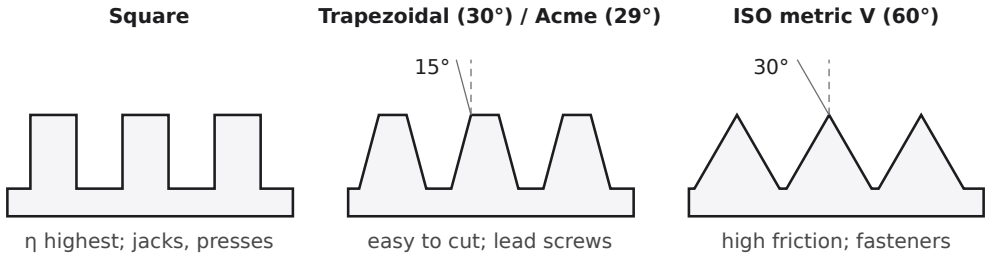

Fig. 6.1 Thread profiles (axial section, crest up)

Q 6.2 CME-403 Nov 2024 Q1(d) 2 marks

Write and explain different parts of screw jack.

SOLUTION

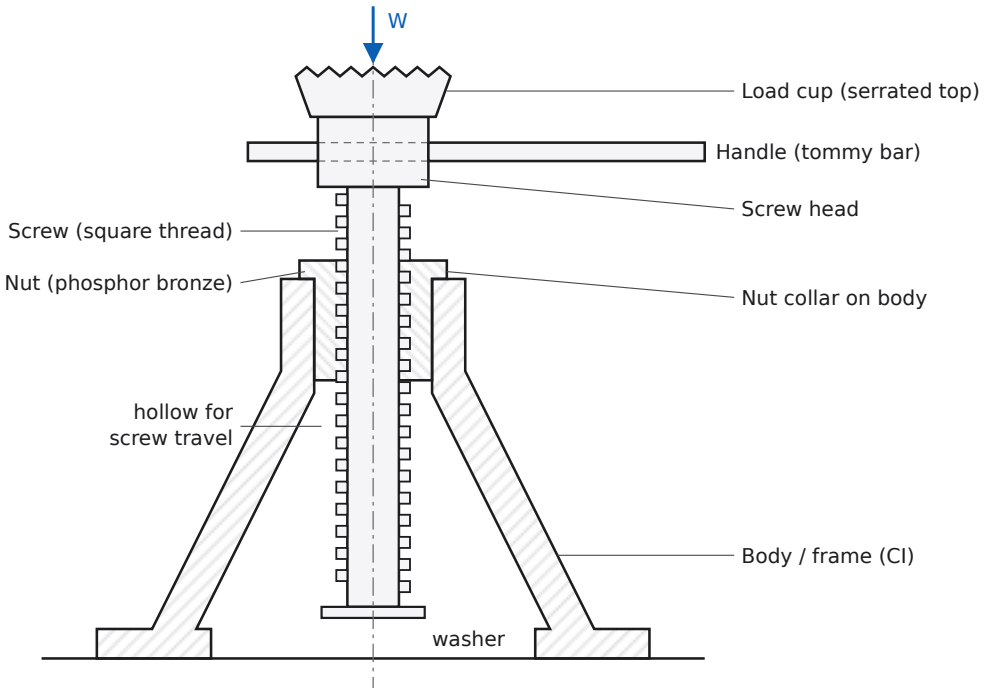

Fig. 6.2 Screw jack assembly (half-sectioned body and nut)

- **Body (frame)**: hollow cast-iron (FG200) casting with a wide base. It carries the nut at the top and leaves room for the screw to travel.
- **Nut**: phosphor bronze, press-fitted in the body and prevented from rotating by a set screw. Its collar bears on the top of the body. Bronze on steel gives low friction and wear, and the cheaper nut wears instead of the screw.
- **Screw**: steel (30C8, 40C8) with a single-start square thread, so it self-locks under load.
- **Screw head**: enlarged end with cross holes for the handle.
- **Handle (tommy bar)**: the operator turns the screw with it. Its length sets the effort: torque = effort × length.

- **Load cup**: sits loosely on the head (often on a thrust washer), so it does not rotate with the screw against the load. The top is serrated to grip the load.
- **Washer and screw at the bottom**: stop the screw from being unscrewed out of the nut.

Q 6.3 ME304 End-sem May 2023 Q4 · ME262 May/June 2019 Q3 — 8 marks

Design a screw and nut of a vertical screw jack to raise and lower a load of 50 kN to a height of 300 mm. Screw is made of SAE1030 alloy steel with yield strength in tension and compression of 324 MPa and 200 MPa in shear. Assume that the nut is made of phosphor bronze with permissible stresses in tension, compression and shear of 42 MPa, 38 MPa and 35 MPa respectively. A friction of 0.15 and bearing pressure 15 MPa is adopted for the design. Draw a sketch also.

ME262 2019: same data, but "assume suitable data for friction and bearing pressure from DDHB" (take μ = 0.15 and S_b = 15 MPa, as below; steel on bronze for a screw jack is 10.5–17.5 MPa).

SOLUTION

Assumed Factor of safety 4 on yield: $\sigma_c = 324/4 = 81$ MPa and $\tau = 200/4 = 50$ MPa for the screw. Single-start square thread to IS 4694. The load cup sits on a thrust washer, so collar friction is not carried by the threaded body. E = 207 GPa.

1. Core diameter from direct compression

$$W = \frac{\pi}{4} d_c^2 \, \sigma_c \;\Rightarrow\; d_c = \sqrt{\frac{4(50\times10^3)}{\pi(81)}} = 28.03 \text{ mm}$$

Assumed IS 4694 square thread: d = 36 mm, p = 6 mm, so $d_c = 30$ mm and $d_m = 36 - 3 = 33$ mm (the next smaller size, 32 × 6, has $d_c = 26$ mm < 28.03 mm).

2. Helix and friction angles

$$\tan\alpha = \frac{p}{\pi d_m} = \frac{6}{\pi(33)} = 0.0579 \Rightarrow \alpha = 3.31^\circ, \qquad \tan\phi = 0.15 \Rightarrow \phi = 8.53^\circ$$

3. Torque to raise the load

$$M_t = \frac{W d_m}{2}\tan(\phi+\alpha) = \frac{50\times10^3(33)}{2}\tan(11.84^\circ) = 50\times10^3 \times 16.5 \times 0.2097 = 172\,998 \text{ N·mm} \approx 173.0 \text{ N·m}$$

4. Combined stresses in the screw body

$$\sigma_c = \frac{4W}{\pi d_c^2} = \frac{4(50\times10^3)}{\pi(30)^2} = 70.74 \text{ MPa}, \qquad \tau = \frac{16 M_t}{\pi d_c^3} = \frac{16(172\,998)}{\pi(30)^3} = 32.63 \text{ MPa}$$

$$\tau_{max} = \sqrt{\left(\frac{70.74}{2}\right)^2 + 32.63^2} = 48.12 \text{ MPa} < 50 \text{ MPa} \quad (\text{FOS} = 200/48.12 = 4.16) \;\checkmark$$

5. Self-locking, lowering torque and efficiency

$\phi = 8.53^\circ > \alpha = 3.31^\circ$, so the screw is self-locking. Torque to lower: $M_t' = \frac{W d_m}{2}\tan(\phi-\alpha) = 75.35$ N·m (positive, so it must be applied).

$$\eta = \frac{\tan\alpha}{\tan(\phi+\alpha)} = \frac{0.0579}{0.2097} = 0.276 = 27.6\%$$

6. Nut: number of threads and height

$$z = \frac{4W}{\pi S_b (d^2 - d_c^2)} = \frac{4(50\times10^3)}{\pi(15)(36^2-30^2)} = 10.72 \;\rightarrow\; z = 11, \qquad H = zp = 11\times6 = 66 \text{ mm}$$

7. Shear of threads (t = p/2 = 3 mm)

$$\tau_s = \frac{W}{\pi d_c t z} = \frac{50\times10^3}{\pi(30)(3)(11)} = 16.08\ \text{MPa} < 50, \qquad \tau_n = \frac{W}{\pi d t z} = \frac{50\times10^3}{\pi(36)(3)(11)} = 13.40\ \text{MPa} < 35\ \checkmark$$

8. Nut outer diameter, collar diameter and collar thickness

Tension in the nut body: $W = \frac{\pi}{4}(D_1^2 - d^2)\sigma_t \Rightarrow D_1 = \sqrt{\frac{4(50\times10^3)}{\pi(42)} + 36^2} = 53.03 \rightarrow D_1 = 55$ mm.

Crushing of the collar on the body: $W = \frac{\pi}{4}(D_2^2 - D_1^2)\sigma_c \Rightarrow D_2 = \sqrt{\frac{4(50\times10^3)}{\pi(38)} + 55^2} = 68.56 \rightarrow D_2 = 70$ mm (actual $\sigma_c = 33.95$ MPa).

Shear of the collar: $W = \pi D_1 t_c \tau_n \Rightarrow t_c = \frac{50\times10^3}{\pi(55)(35)} = 8.27 \rightarrow t_c = 10$ mm.

9. Buckling of the screw

Unsupported length $l = \text{lift} + H/2 = 300 + 33 = 333$ mm, $k = d_c/4 = 7.5$ mm, $l/k = 44.4$. One end fixed in the nut and the other free: $n = 0.25$.

$$\left(\frac{l}{k}\right)_{crit} = \sqrt{\frac{2\pi^2 nE}{S_{yt}}} = \sqrt{\frac{2\pi^2(0.25)(207\,000)}{324}} = 56.2 > 44.4 \ \Rightarrow\ \text{Johnson's equation}$$

$$P_{cr} = \frac{\pi}{4}(30)^2(324)\left[1 - \frac{324}{4(0.25)\pi^2(207\,000)}(44.4)^2\right] = 157.4\ \text{kN}, \qquad \frac{P_{cr}}{W} = 3.15$$

The screw is safe against buckling.

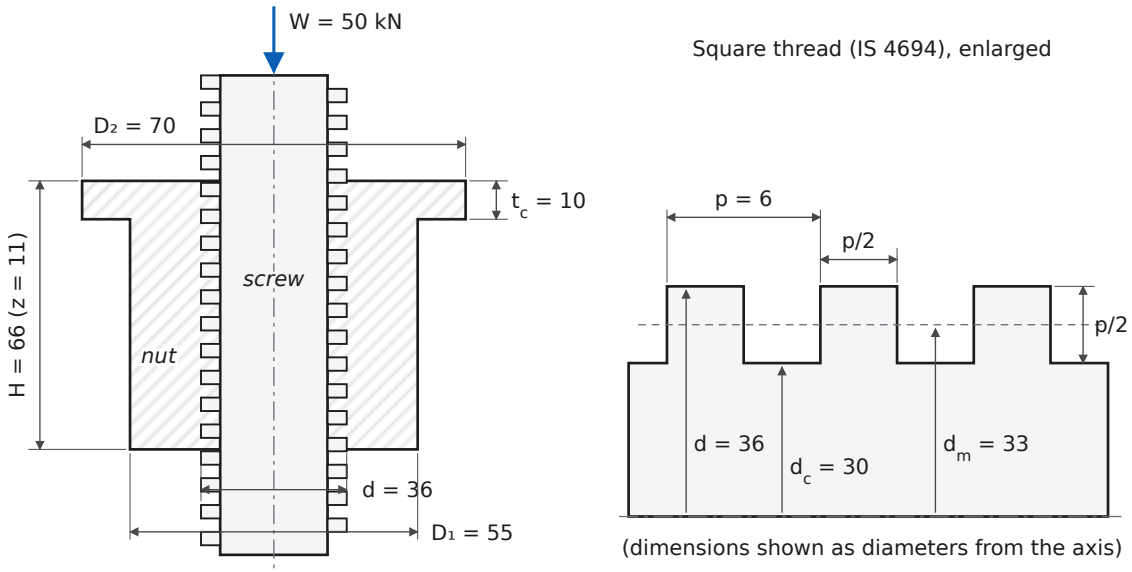

Fig. 6.3 Q 6.3: designed screw and nut (schematic) and square-thread detail; all dimensions in mm

Answer. Screw: square thread 36 × 6 ($d_c = 30$, $d_m = 33$), $M_t = 173$ N·m, $\tau_{max} = 48.1$ MPa, $\eta = 27.6$ %, self-locking, buckling FOS 3.15. Nut: z = 11 threads, H = 66, $D_1 = 55$, collar $D_2 = 70$, $t_c = 10$ mm.

Exam tip Always check the combined (principal shear) stress after picking the thread from the table. Direct compression alone under-sizes the screw, because the torsion from M_t adds a lot. Sketch the full jack (Fig. 6.2) as well as the nut. Examiners look for the labelled assembly.

Q 6.4 ME304 End-sem May 2024 Q2 — 8 marks

Design only a screw and nut for a vertical screw jack to raise and lower a load of 30 kN to a height of 250 mm. Screw is made of AISI1030 alloy steel with allowable strength in tension and compression of 60 MPa and 40 MPa in shear respectively. Assume that the nut is made of phosphor bronze with

permissible stresses in tension, compression and shear of 42 MPa, 38 MPa and 35 MPa respectively. Take a friction value of 0.15 and a bearing pressure 15 MPa on the screw. Draw a well labelled sketch also.

SOLUTION

Assumed The allowable stresses are used directly ($\sigma_c = 60$, $\tau = 40$ MPa). For the buckling check, $S_{yt} = 324$ MPa (1030 steel, as in Q 6.3) and E = 207 GPa. Collar friction is not carried by the threaded body.

1. Core diameter and thread

$$d_c = \sqrt{\frac{4W}{\pi \sigma_c}} = \sqrt{\frac{4(30 \times 10^3)}{\pi (60)}} = 25.23 \text{ mm}$$

Assumed IS 4694: d = 32, p = 6, so $d_c = 26$ and $d_m = 29$ mm.

2. Torque

$$\tan\alpha = \frac{6}{\pi(29)} = 0.0659,\ \alpha = 3.77^\circ; \quad \phi = 8.53^\circ; \quad M_t = \frac{30 \times 10^3 (29)}{2} \tan(12.30^\circ) = 94\,835 \text{ N·mm} = 94.8 \text{ N·m}$$

3. Combined stress

$$\sigma_c = \frac{4(30 \times 10^3)}{\pi (26)^2} = 56.50 \text{ MPa}, \quad \tau = \frac{16(94\,835)}{\pi (26)^3} = 27.48 \text{ MPa}, \quad \tau_{max} = \sqrt{28.25^2 + 27.48^2} = 39.41 \text{ MPa} < 40 \ \checkmark$$

4. Self-locking and efficiency

$\phi = 8.53^\circ > \alpha = 3.77^\circ$, so it is self-locking. Lowering torque $= \frac{W d_m}{2} \tan(\phi - \alpha) = 36.2$ N·m. $\eta = 0.0659 / 0.2180 = 30.2\%$.

5. Nut

$$z = \frac{4(30 \times 10^3)}{\pi (15)(32^2 - 26^2)} = 7.32 \to 8, \qquad H = 8 \times 6 = 48 \text{ mm}$$

$$\tau_s = \frac{30 \times 10^3}{\pi (26)(3)(8)} = 15.30 \text{ MPa}, \qquad \tau_n = \frac{30 \times 10^3}{\pi (32)(3)(8)} = 12.43 \text{ MPa} \ \checkmark$$

$D_1 = \sqrt{\frac{4(30\times10^3)}{\pi(42)} + 32^2} = 43.97 \to 45$ mm; $D_2 = \sqrt{\frac{4(30\times10^3)}{\pi(38)} + 45^2} = 55.05 \to 60$ mm ($\sigma_c = 24.3$ MPa); $t_c = \frac{30\times10^3}{\pi(45)(35)} = 6.06 \to 8$ mm.

6. Buckling

$l = 250 + 48/2 = 274$ mm, $k = 26/4 = 6.5$ mm, $l/k = 42.2 < 56.2$, so Johnson's equation applies:

$$P_{cr} = \frac{\pi}{4}(26)^2 (324) \left[1 - \frac{324}{4(0.25)\pi^2 (207\,000)} (42.2)^2\right] = 123.5 \text{ kN} = 4.12\,W \ \checkmark$$

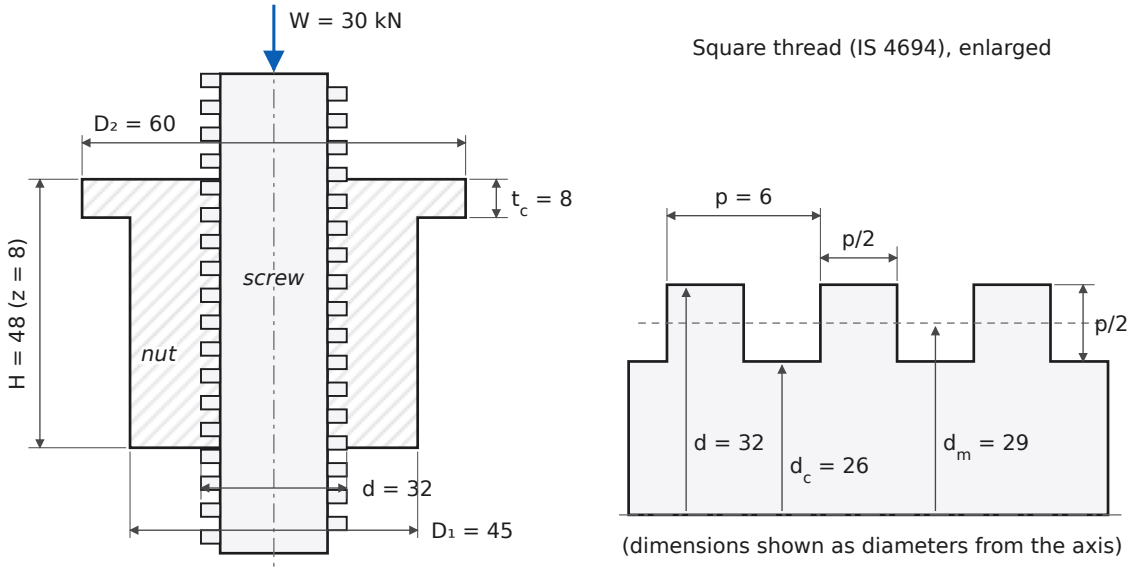

Fig. 6.4 Q 6.4: screw and nut (the assembly with part names is Fig. 6.2); all dimensions in mm

Answer. Screw: square thread 32 × 6 ($d_c = 26$, $d_m = 29$), $M_t = 94.8$ N·m, $\tau_{max} = 39.4$ MPa, $\eta = 30.2$ %, self-locking. Nut: $z = 8$, $H = 48$, $D_1 = 45$, $D_2 = 60$, $t_c = 8$ mm.

Q 6.5 AE302 May 2023 Q4 — 8 marks

Design a power screw of 60 kN capacity for a maximum lift of 375 mm. The ground clearance should be as small as possible.

SOLUTION

Assumed This is a screw jack. Screw: 30C8, $S_{yt} = 400$ MPa, $S_{sy} = 0.5 S_{yt} = 200$ MPa, FOS 5, so $\sigma_c = 80$ MPa and $\tau = 40$ MPa. Nut: phosphor bronze with $\sigma_t = 42$, $\sigma_c = 38$, $\tau = 35$ MPa. μ = 0.15. Bearing pressure $S_b = 17.5$ MPa, the upper value for steel on bronze, to keep the nut short. Effort at the handle 400 N. The cup sits on a thrust ball bearing. E = 207 GPa.

"Ground clearance as small as possible" means the closed height of the jack must be minimum. The closed height is about lift + nut height + head and cup + base. So the nut height is kept to the minimum, with the highest permissible bearing pressure, and the nut sits flush with the top of the body.

1. Screw size

$$d_c = \sqrt{\frac{4(60 \times 10^3)}{\pi(80)}} = 30.90 \text{ mm}$$

Try 40 × 7 ($d_c = 33$, $d_m = 36.5$): $M_t = 233.2$ N·m and $\tau_{max} = 48.2$ MPa > 40. That fails. Next size:

Assumed IS 4694: d = 44, p = 7, so $d_c = 37$ and $d_m = 40.5$ mm.

$$\tan\alpha = \frac{7}{\pi(40.5)} = 0.0550,\ \alpha = 3.15^\circ; \qquad M_t = \frac{60 \times 10^3 (40.5)}{2} \tan(11.68^\circ) = 251\,168 \text{ N·mm} = 251.2 \text{ N·m}$$

$$\sigma_c = \frac{4(60 \times 10^3)}{\pi(37)^2} = 55.80, \quad \tau = \frac{16(251\,168)}{\pi(37)^3} = 25.25, \quad \tau_{max} = \sqrt{27.90^2 + 25.25^2} = 37.63 \text{ MPa} < 40 \ \checkmark$$

Self-locking: $\phi = 8.53^\circ > \alpha = 3.15^\circ$. Lowering torque = 114.5 N·m. $\eta = 0.0550/0.2067 = 26.6\%$.

2. Nut

$$z = \frac{4(60 \times 10^3)}{\pi(17.5)(44^2 - 37^2)} = 7.70 \to 8, \qquad H = 8 \times 7 = 56 \text{ mm}$$

$$\tau_s = \frac{60\times10^3}{\pi(37)(3.5)(8)} = 18.43\ \text{MPa} < 40, \qquad \tau_n = \frac{60\times10^3}{\pi(44)(3.5)(8)} = 15.50\ \text{MPa} < 35\ \checkmark$$

$D_1 = \sqrt{\frac{4(60\times10^3)}{\pi(42)} + 44^2} = 61.28 \to 65$ mm; $D_2 = \sqrt{\frac{4(60\times10^3)}{\pi(38)} + 65^2} = 78.96 \to 85$ mm; $t_c = \frac{60\times10^3}{\pi(65)(35)} = 8.39 \to 10$ mm.

3. Buckling

$l = 375 + 56/2 = 403$ mm, $k = 37/4 = 9.25$, $l/k = 43.6 < (l/k)_{crit} = \sqrt{2\pi^2(0.25)(207\,000)/400} = 50.5$, so Johnson's equation applies:

$$P_{cr} = \frac{\pi}{4}(37)^2(400)\left[1 - \frac{400}{4(0.25)\pi^2(207\,000)}(43.6)^2\right] = 270.3\ \text{kN} = 4.5\,W\ \checkmark$$

4. Handle and closed height

Handle length $L = M_t/F = 251\,168/400 = 628 \to 650$ mm. Handle diameter from bending, with $\sigma_b = 100$ MPa: $d_h = \sqrt[3]{32(251\,168)/(\pi\times100)} = 29.5 \to 30$ mm. Without the thrust bearing, a plain collar ($D_o = 65$, $D_i = 25$, $\mu_c = 0.15$) would add $M_c = 0.15(60\times10^3)(65+25)/4 = 202.5$ N·m and nearly double the effort.

Body height ≥ lift + H ≈ 375 + 56 ≈ 440 mm. With the collar, head and cup (about 75 mm), the closed height is about 515 mm. This is the minimum for a 375 mm lift with a plain (non-telescopic) screw.

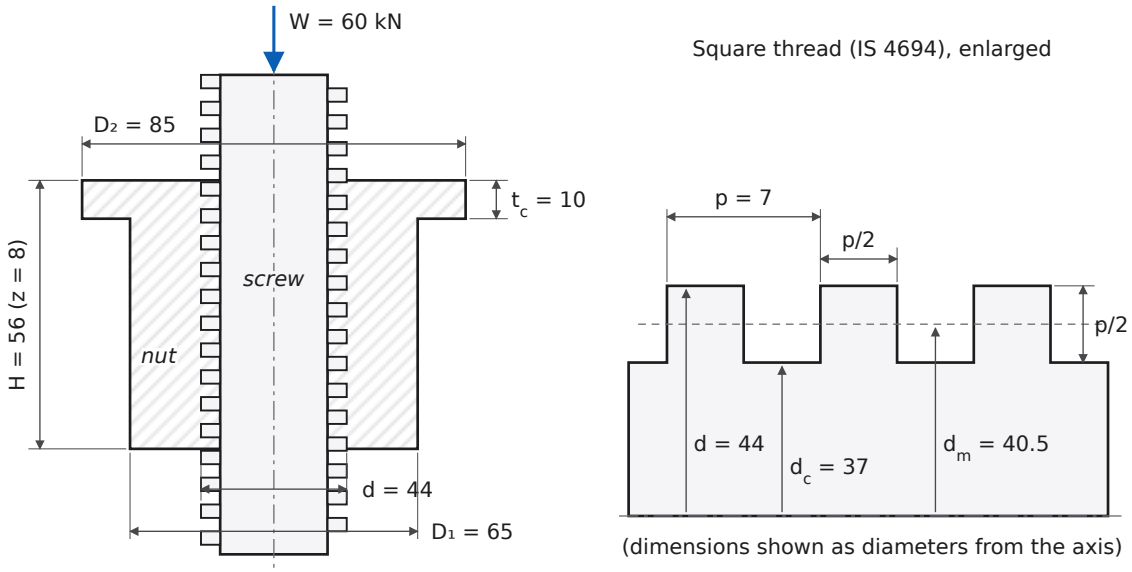

Fig. 6.5 Q 6.5: screw and nut of the 60 kN jack; all dimensions in mm (assembly as in Fig. 6.2)

Answer. Screw 30C8, square thread 44 × 7 ($d_c = 37$, $d_m = 40.5$), $M_t = 251$ N·m, η = 26.6 %, self-locking, buckling FOS 4.5. Nut (phosphor bronze): z = 8, H = 56, $D_1 = 65$, $D_2 = 85$, $t_c = 10$. Handle 650 mm × ⌀30. Closed height ≈ 515 mm.

Exam tip When no data is given, list your assumed materials, FOS, μ and S_b in one block at the start. Marks are given for a consistent design, not for particular numbers.

Bolted joints

Q 6.6 ME262 May 2023 Q2 — 3 + 5 marks

(a) How do you consider the initial tightening load when external forces are acting on a bolt? (b) A 0.3125 m × 0.325 m diesel engine running at 320 rpm has a compression pressure of 2.25 N/mm² and a maximum explosion pressure of 3.8 N/mm². The head is held in place by eight M14 × 2c bolts

arranged on a 0.4 m bolt circle. A thin asbestos gasket is used. Determine the stresses induced in the bolt due to (i) applied load and (ii) tightening.

SOLUTION: (A) INITIAL TIGHTENING PLUS EXTERNAL LOAD

- Tightening puts the bolt in tension P_i and the clamped parts (flanges and gasket) in compression P_i.
- An external load P then stretches the bolt further by δ, and the parts recover (decompress) by the same δ. The bolt load rises by $k_b\delta$ and the clamping force falls by $k_c\delta$, with $P = (k_b + k_c)\delta$. So

$$P_b = P_i + \frac{k_b}{k_b + k_c}P = P_i + KP$$

- Hard metal-to-metal joint ($k_c \gg k_b$): K is small and the bolt sees little extra load. Soft gasket (k_c small): K → 1 and nearly all of P adds to the bolt.
- The joint opens (leaks) when $(1 - K)P \geq P_i$. So P_i must exceed $(1 - K)P$. For leak-proof joints, Bhandari takes $P_i = 2840\,d$ N.

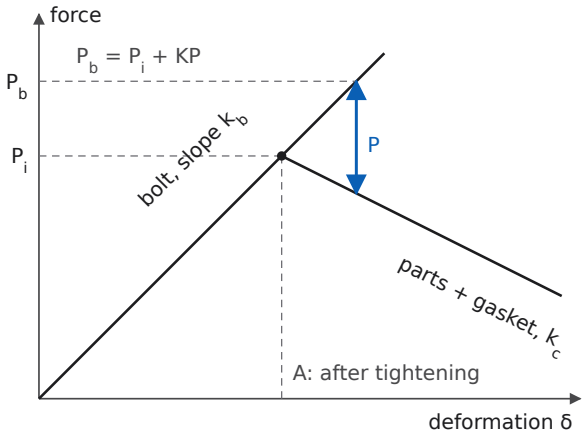

Fig. 6.6 Joint diagram: soft gasket (small k_c) gives large K

Type of joint (Bhandari)	K
Hard copper gasket, long through bolts	0.25
Soft copper gasket, long through bolts / hard copper gasket, studs	0.50
Soft copper gasket with studs / soft packing with through bolts	0.75
Soft packing with studs	1.00

SOLUTION: (B) DIESEL-ENGINE CYLINDER HEAD

Assumed Bore D = 312.5 mm (stroke 325 mm and speed 320 rpm are not needed). M14 × 2 coarse: tensile stress area $A_t = 115$ mm², core diameter $d_c = 11.546$ mm ($A_c = 104.7$ mm²). Thin asbestos gasket = soft packing with through bolts, K = 0.75.

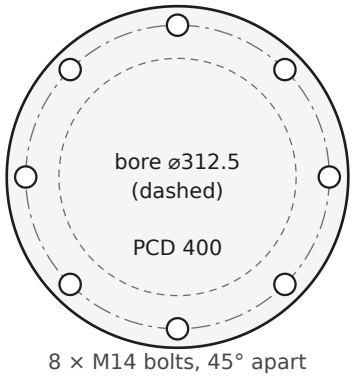

Fig. 6.7 Cylinder head, plan

(i) Stress due to the applied (gas) load

$$P = p_{max}\frac{\pi}{4}D^2 = 3.8 \times \frac{\pi}{4}(312.5)^2 = 291\,456 \text{ N}$$

$$P_{bolt} = \frac{291\,456}{8} = 36\,432 \text{ N}, \qquad \sigma = \frac{36\,432}{115} = 316.8 \text{ MPa}$$

On the core area, $\sigma = 36\,432/104.7 = 347.9$ MPa.

(ii) Stress due to initial tightening

$$P_i = 2840\,d = 2840(14) = 39\,760 \text{ N}, \qquad \sigma_i = \frac{39\,760}{115} = 345.7 \text{ MPa} \quad (379.7 \text{ MPa on core area})$$

Resultant bolt load with the soft gasket

$$P_b = P_i + KP_{bolt} = 39\,760 + 0.75(36\,432) = 67\,084 \text{ N}, \qquad \sigma_b = \frac{67\,084}{115} = 583.3 \text{ MPa}$$

Leak check: $(1-K)P_{bolt} = 9108$ N < $P_i = 39\,760$ N, so the gasket stays compressed at peak pressure. The resultant 583 MPa needs high-tensile bolts, property class 10.9 or 12.9 ($S_{yt} \approx$ 940–1100 MPa). If studs were used, K = 1 and $\sigma_b = 662.5$ MPa.

> **Answer.** (i) Gas load per bolt 36.43 kN, σ = 316.8 MPa (stress area). (ii) Initial tension 39.76 kN, σ_i = 345.7 MPa. Resultant with asbestos gasket (K = 0.75): 67.1 kN, σ = 583 MPa, so high-tensile bolts are needed.

Q 6.7 ME304 End-sem May 2024 Q5(b) — 4 marks

The bolts (as shown in figure) are to be designed for a rigid bracket to carry a load of 50 kN. Assume that maximum allowable shear stress in the bolt in shank area is 40 MPa. All dimensions in mm.

SOLUTION

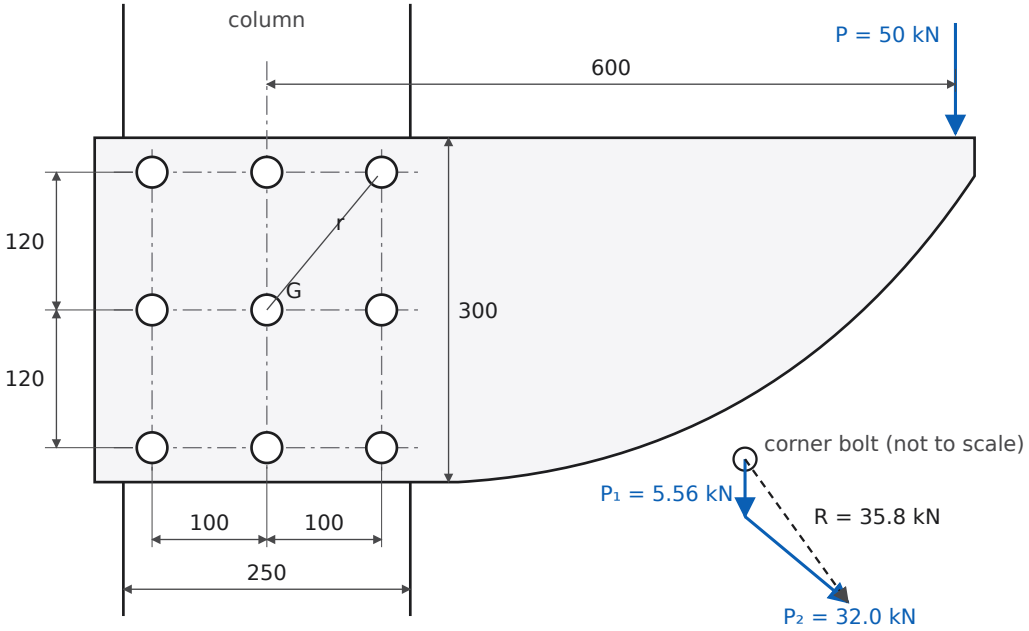

Fig. 6.8 Q 6.7: nine-bolt bracket (redrawn) and forces on the worst bolt

1. Primary (direct) shear

The centroid G of the 3 × 3 group is the centre bolt. $P_1 = \dfrac{50 \times 10^3}{9} = 5556$ N per bolt, acting downward.

2. Secondary (torsional) shear

Moment about G: $Pe = 50 \times 10^3 \times 600 = 30 \times 10^6$ N·mm. Distances: corner bolts $r_1 = \sqrt{100^2 + 120^2} = 156.2$ mm (4 bolts); top and bottom middle bolts 120 mm (2 bolts); left and right middle bolts 100 mm (2 bolts); centre bolt 0.

$$\sum r^2 = 4(24\,400) + 2(120^2) + 2(100^2) = 146\,400 \text{ mm}^2$$

$$P_2 = \frac{Pe\, r_1}{\sum r^2} = \frac{30 \times 10^6 (156.2)}{146\,400} = 32\,009 \text{ N}$$

3. Resultant on the worst bolt

P_2 is perpendicular to r. On the two right-hand corner bolts its vertical component is downward, the same direction as P_1, so these are the worst bolts. The angle θ between P_1 and P_2 satisfies $\cos\theta = 100/156.2 = 0.640$.

$$R = \sqrt{P_1^2 + P_2^2 + 2P_1P_2\cos\theta} = \sqrt{5556^2 + 32\,009^2 + 2(5556)(32\,009)(0.640)} = 35\,821 \text{ N}$$

(Check by components: horizontal $32\,009 \times 120/156.2 = 24\,590$ N, vertical $5556 + 32\,009 \times 100/156.2 = 26\,047$ N.)

4. Bolt size

$$\frac{\pi}{4}d^2(40) = 35\,821 \;\Rightarrow\; d = 33.77 \text{ mm} \;\rightarrow\; \text{M36} \quad (\tau = 35.2 \text{ MPa})$$

> **Answer.** P_1 = 5.56 kN, P_2 = 32.0 kN, R_{max} = 35.8 kN (right-hand corner bolts); d = 33.8 mm, so use **9 × M36** bolts.

Q 6.8 ME262 May/June 2019 Q6 — 8 marks

Four bolts (as shown in figure) are to be designed for a rigid bracket to carry a load of 12 kN. Assume that maximum shear stress in the bolt in shank area is approx. 40 MPa. All dimensions are in mm.

SOLUTION

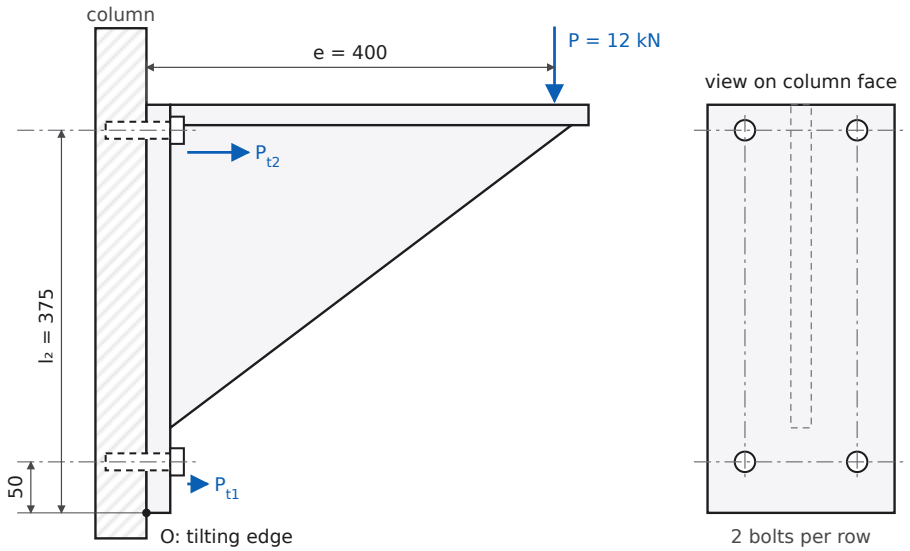

Fig. 6.9 Q 6.8: bracket bolted to a column face (redrawn). Load is perpendicular to the bolt axes, so the bracket tends to tilt about O.

1. Primary (direct) shear

$$P_s = \frac{P}{4} = \frac{12 \times 10^3}{4} = 3000 \text{ N per bolt}$$

2. Tensile load from the tilting moment

The bracket tends to tilt about the bottom edge O. Bolt elongation, and so bolt load, is proportional to the distance from O: $P_t = C\,l$. Moment balance about O, with two bolts in each row:

$$Pe = 2C(l_1^2 + l_2^2) \;\Rightarrow\; C = \frac{12 \times 10^3(400)}{2(50^2 + 375^2)} = 16.77 \text{ N/mm}$$

$$P_{t2} = C\,l_2 = 16.77(375) = 6288 \text{ N (upper bolts, critical)}, \qquad P_{t1} = 16.77(50) = 838 \text{ N}$$

3. Combined stress: maximum shear stress theory

For the upper bolt, with A the shank area: $\sigma_t = 6288/A$ and $\tau = 3000/A$.

$$\tau_{max} = \sqrt{\left(\frac{\sigma_t}{2}\right)^2 + \tau^2} = \frac{1}{A}\sqrt{3144^2 + 3000^2} = \frac{4345.7}{A} = 40 \;\Rightarrow\; A = 108.6 \text{ mm}^2$$

$$d = \sqrt{\frac{4(108.6)}{\pi}} = 11.76 \text{ mm} \rightarrow \text{M12}$$

Check (M12 shank, A = 113.1 mm²): $\sigma_t = 55.6$ MPa, $\tau = 26.5$ MPa, $\tau_{max} = 38.4$ MPa < 40 MPa ✓.

Answer. P_s = 3 kN per bolt, P_t = 6.29 kN on each upper bolt, equivalent force 4.35 kN, so A = 108.6 mm² and d = 11.8 mm. Use **4 × M12** bolts (on the shank area, as the question specifies).

Exam tip On the tensile-stress area instead, M12 (A_t = 84.3 mm²) gives 51.6 MPa, so use M14 (A_t = 115 mm², 37.8 MPa). State which area you use. The pivot is the tilting edge, not the centroid.

7 Springs

Helical compression springs (valve springs, energy absorbers, fatigue loading) and the nipping of leaf springs. Springs appear in five of the papers, mostly as 4–8 mark designs.

KEY FORMULAS

- Spring index $C = D/d$; Wahl factor $K = \dfrac{4C-1}{4C-4} + \dfrac{0.615}{C}$; direct-shear factor $K_s = 1 + \dfrac{0.5}{C}$
- $\tau = K\dfrac{8PD}{\pi d^3} = K\dfrac{8PC}{\pi d^2}$; $\delta = \dfrac{8PD^3N}{Gd^4}$; $k = \dfrac{P}{\delta} = \dfrac{Gd^4}{8D^3N}$
- Square and ground ends: $N_t = N + 2$, solid length $L_s = N_t d$; free length $L_f = L_s + \delta_{max} + 0.15\,\delta_{max}$; pitch $p = \dfrac{L_f}{N_t - 1}$
- Buckling: no guide needed if $L_f/D \le 2.6$ (fixed–fixed ends)
- Energy stored from δ_1 to δ_2: $U = \tfrac{1}{2}k(\delta_2^2 - \delta_1^2)$
- Fatigue (Bhandari): $P_m = \tfrac{1}{2}(P_{max} + P_{min})$, $P_a = \tfrac{1}{2}(P_{max} - P_{min})$; τ_m with K_s, τ_a with K; $\frac{1}{f_s} = \frac{\tau_m - \tau_a}{S_{sy}} + \frac{2\tau_a}{S'_{se}}$
- Leaf spring with nipping: $\sigma = \dfrac{6PL}{nbt^2}$, nip $C = \dfrac{2PL^3}{Enbt^3}$, bolt load $P_b = \dfrac{2n_g n_f P}{n(3n_f + 2n_g)}$

Theory

Q 7.1 ME304 End-sem May 2024 Q1(a) — 2 marks

How is the fatigue life of a spring enhanced? Discuss the stresses in a closed coil helical spring.

SOLUTION

Enhancing fatigue life

- **Shot peening** leaves compressive residual stress at the wire surface, where fatigue cracks start. It raises the endurance limit by about 20–30 %.
- **Surface quality**: use valve-spring-quality wire with no seams or decarburisation, and grind or polish the surface.
- **Presetting (scragging)**: compress the spring beyond its working length once. This yields the surface layer and leaves favourable residual stress.
- **Stress-relieving** after coiling, plus corrosion protection (plating, painting, oiling).
- **Design**: keep the stress range low, use a moderate index (C = 6–10), keep the natural frequency well above the operating frequency to avoid surge, and finish the ends properly.

Stresses in a closed-coil helical spring. Cut the wire at any section. Equilibrium of half the spring gives a direct shear force P and a torque $T = PD/2$ on the wire.

- Torsional shear $\tau_1 = 16T/\pi d^3 = 8PD/\pi d^3$, plus direct shear $\tau_2 = 4P/\pi d^2$. These add at the **inner** fibre:

$$\tau = \tau_1 + \tau_2 = \left(1 + \frac{0.5}{C}\right)\frac{8PD}{\pi d^3} = K_s\frac{8PD}{\pi d^3}$$

- **Curvature**: the inner fibre is shorter, so its shear strain and stress are higher still. The Wahl factor K accounts for both direct shear and curvature: $\tau_{max} = K\,8PD/\pi d^3$.
- Bending from the small helix angle is negligible in a closed-coil spring.

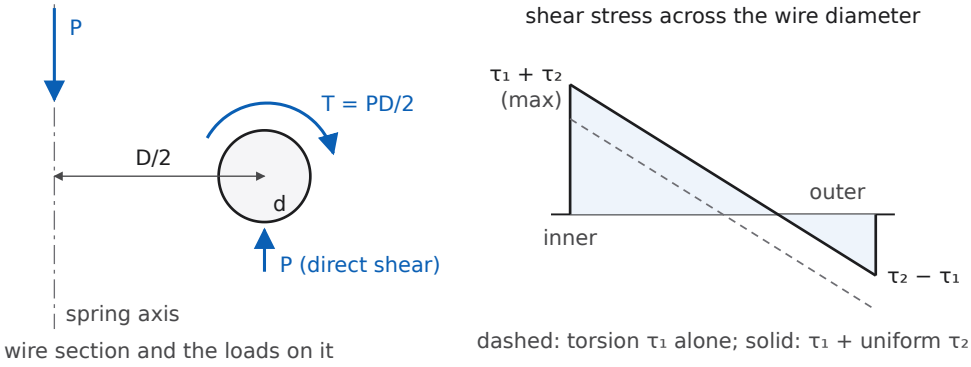

Fig. 7.1 Loads on the wire section, and the stress distribution (curvature raises the inner-fibre value further)

Q 7.2 ME304 End-sem May 2024 Q4(a) 4 marks

What is nipping in leaf springs? Derive an expression to determine the equalized stress in a leaf spring.

SOLUTION

In a multi-leaf spring with n_f extra full-length leaves and n_g graduated leaves, the full-length leaves carry 50 % more stress than the graduated leaves. **Nipping** equalises them. The full-length leaves are given a larger radius of curvature than the graduated leaves, so before assembly there is a gap C (the **nip**) between them at the centre. Tightening the centre bolt closes the gap. This pre-stresses the full-length leaves opposite to the service stress and the graduated leaves in the same sense. Under full load, all leaves then carry the same stress.

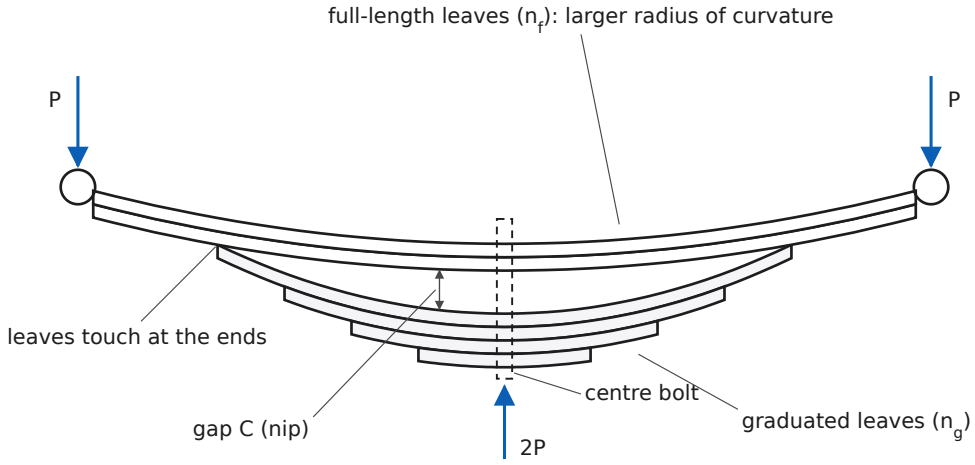

Fig. 7.2 Nipping of a semi-elliptic leaf spring (curvature exaggerated)

Assumed Each half is a cantilever of length L with end load P (total 2P). Leaf width b, thickness t, $n = n_f + n_g$.

1. Full-length and graduated leaves separately

Full-length leaves (uniform cantilever, $I = n_f bt^3/12$) and graduated leaves (equivalent triangular plate of uniform strength), carrying loads P_f and P_g:

$$\sigma_f = \frac{6P_fL}{n_f bt^2}, \quad \delta_f = \frac{4P_fL^3}{En_f bt^3}; \qquad \sigma_g = \frac{6P_gL}{n_g bt^2}, \quad \delta_g = \frac{6P_gL^3}{En_g bt^3}$$

Without nip, $\delta_f = \delta_g$ and $P_f + P_g = P$. So $P_f = \dfrac{3n_fP}{3n_f + 2n_g}$ and $P_g = \dfrac{2n_gP}{3n_f + 2n_g}$, giving

$$\sigma_f = \frac{18PL}{bt^2(3n_f + 2n_g)}, \qquad \sigma_g = \frac{12PL}{bt^2(3n_f + 2n_g)}, \qquad \sigma_f = 1.5\,\sigma_g$$

2. Equalised stress

For equal stresses under full load, $\frac{P_f}{n_f} = \frac{P_g}{n_g} = \frac{P}{n}$. Substituting in either stress formula:

$$\boxed{\sigma = \frac{6PL}{nbt^2}}$$

3. Nip and bolt load

The free shapes must differ by the difference in deflections under these equal-stress loads:

$$C = \delta_g - \delta_f = \frac{6(P/n)L^3}{Ebt^3} - \frac{4(P/n)L^3}{Ebt^3} = \frac{2PL^3}{Enbt^3}$$

To close C, an initial force P_i acts between the two sets at each end. It bends the full-length leaves one way and the graduated leaves the other:

$$\frac{4P_iL^3}{En_fbt^3} + \frac{6P_iL^3}{En_gbt^3} = \frac{2PL^3}{Enbt^3} \;\Rightarrow\; P_i = \frac{n_fn_gP}{n(3n_f + 2n_g)}$$

The centre bolt holds both halves, so $P_b = 2P_i = \frac{2n_gn_fP}{n(3n_f + 2n_g)}$.

> **Answer.** Equalised stress σ = 6PL/(nbt²); nip C = 2PL³/(Enbt³); bolt load $P_b = 2n_gn_fP / [n(3n_f + 2n_g)]$. Here P is the end load of one half and L is the half-span (cantilever length).

Helical spring design

Q 7.3 ME304 End-sem May 2024 Q4(b) — 4 marks

An engine valve spring having a mean coil diameter of 36 mm deflects by 12.5 mm at a maximum load of 450 N. The working stress in the wire is not to exceed 300 MPa. Determine the size of the wire and number of coils to be used.

SOLUTION

Assumed G = 81 370 MPa (steel spring wire, Bhandari). Standard wire diameters (IS 4454): ... 5.0, 5.5, 6.0, 6.5 ... mm. Square and ground ends.

1. Wire diameter (Wahl factor, by iteration)

First trial with K = 1: $d^3 = \frac{8PD}{\pi\tau} = \frac{8(450)(36)}{\pi(300)} = 137.5 \Rightarrow d = 5.16$ mm, so C = 6.98 and K = 1.214.

$$d = \left(\frac{8KPD}{\pi\tau}\right)^{1/3}: \quad 5.16 \to 5.51 \to 5.53\ \text{mm} \quad (C = 6.51,\ K = 1.231)$$

A 5.5 mm wire gives τ = 304.8 MPa > 300, so take **d = 6 mm**. Then C = 6, K = 1.2525 and

$$\tau = 1.2525 \times \frac{8(450)(36)}{\pi(6)^3} = 239.2\ \text{MPa} < 300\ \checkmark$$

2. Number of coils

$$N = \frac{Gd^4\delta}{8PD^3} = \frac{81\,370(6)^4(12.5)}{8(450)(36)^3} = 7.85 \;\to\; N = 8\ \text{active coils}$$

(With G = 80 GPa, N = 7.72, still 8.) Total coils $N_t = 10$. Solid length = 60 mm. Actual k = 35.3 N/mm, so δ_{max} = 12.74 mm. Free length = 60 + 12.74 + 0.15(12.74) = 74.7, take 75 mm. Pitch = 75/9 = 8.3 mm. $L_f/D = 2.08$, so there is no buckling.

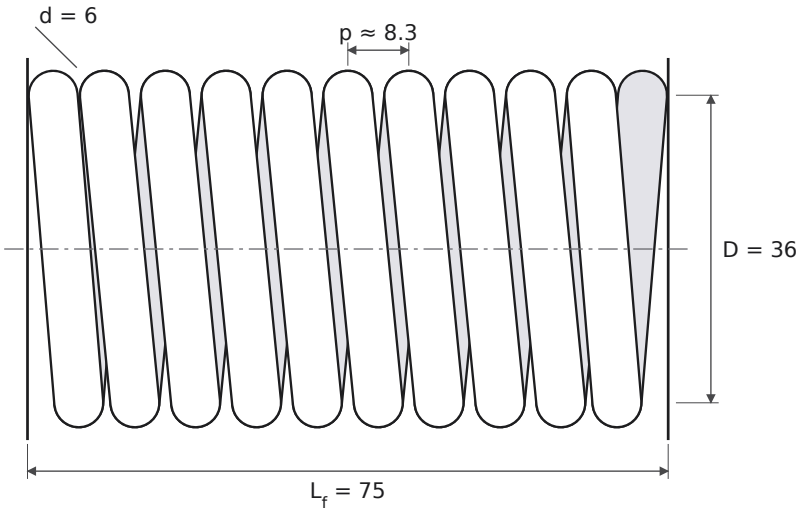

Fig. 7.3 Q 7.3: valve spring (mm)

Answer. Wire d = 6 mm (C = 6, τ = 239 MPa); N = 8 active coils (10 total with square and ground ends); $L_S = 60$, $L_f \approx 75$ mm.

Q 7.4 ME-313 May 2019 Q5 · ME-313 (2nd paper) Q5 — 14 marks

Design a helical spring used in an engine (valve) for the given data: length of spring when the valve is open = 40 mm; length when the valve is closed = 50 mm; spring load when the valve is open = 400 N; spring load when the valve is closed = 200 N; maximum inside diameter of spring = 28 mm; maximum permissible shearing stress = 400 MPa; modulus of rigidity = 80 GPa.

SOLUTION

Assumed Square and ground ends. Clearance between coils at maximum load = 15 % of δ_{max}. Standard wire diameters (IS 4454).

1. Stiffness

Opening the valve compresses the spring a further 50 − 40 = 10 mm while the load rises by 400 − 200 = 200 N:

$$k = \frac{400-200}{50-40} = 20\ \text{N/mm}, \qquad \delta_{closed} = \frac{200}{20} = 10\ \text{mm}, \qquad \delta_{max} = \frac{400}{20} = 20\ \text{mm}$$

2. Wire and coil diameters

The inside diameter is limited: $D_i = D - d \le 28$, so take $D = 28 + d$. Then the stress at the maximum load of 400 N must satisfy

$$\tau = K\frac{8(400)(28+d)}{\pi d^3} \le 400\ \text{MPa}$$

d (mm)	D = 28 + d	C	K	τ (MPa)	
4.0	32	8.00	1.184	603	too high
4.5	32.5	7.22	1.206	438	too high
5.0	33	6.60	1.227	330	✓

(Solving exactly gives d = 4.65 mm.) Take **d = 5 mm, D = 33 mm**. Then $D_i = 28$ mm, within the limit, and $D_o = 38$ mm.

3. Number of coils

$$N = \frac{Gd^4}{8D^3k} = \frac{80\,000(5)^4}{8(33)^3(20)} = 8.70 \;\rightarrow\; N = 9, \qquad N_t = 9 + 2 = 11$$

Actual stiffness $k = \dfrac{80\,000(5)^4}{8(33)^3(9)} = 19.32$ N/mm, so $\delta_{max} = 400/19.32 = 20.70$ mm (10.35 mm at 200 N).

4. Lengths and pitch

$$L_s = N_t d = 11 \times 5 = 55 \text{ mm}, \qquad L_f = 55 + 20.70 + 0.15(20.70) = 78.8 \;\rightarrow\; 80 \text{ mm}$$

$$p = \frac{L_f}{N_t - 1} = \frac{80}{10} = 8 \text{ mm}$$

5. Checks

- Buckling: $L_f/D = 80/33 = 2.42 < 2.6$, so no guide is needed.
- Stress when closed solid: deflection 80 − 55 = 25 mm, P = 483 N, τ = 398.5 MPa ≤ 400 MPa ✓. The spring cannot be overstressed even if it is closed solid.

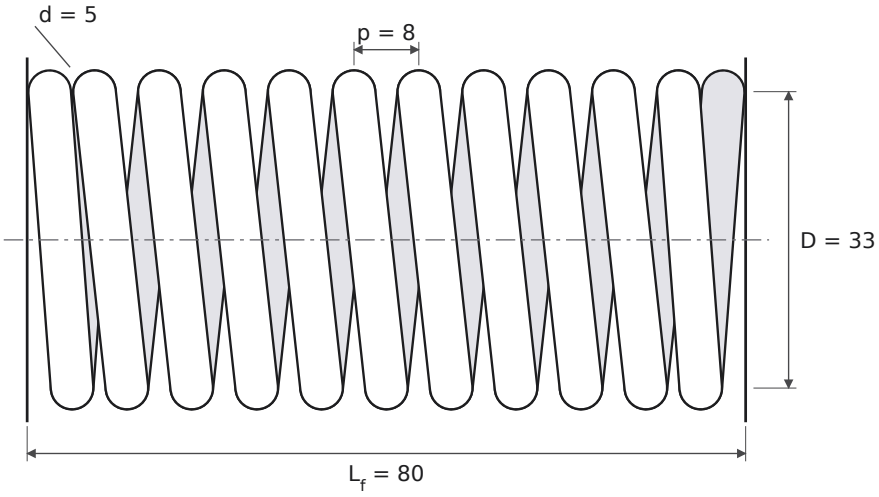

Fig. 7.4 Q 7.4: valve spring (mm)

Answer. d = 5 mm, D = 33 mm (D_i = 28, D_o = 38), C = 6.6, K = 1.227, τ_{max} = 330 MPa; N = 9 active, N_t = 11; k = 19.3 N/mm; L_s = 55, L_f = 80, p = 8 mm; L_f/D = 2.42 (no buckling).

Exam tip As in Bhandari's similar valve-spring example, the two installed lengths are used only to find k = 20 N/mm. Taken literally, they would fix L_f = 50 + 10 = 60 mm and require L_s < 40 mm. That is impossible here: with D_i ≤ 28 and τ ≤ 400 MPa, even the ideal non-standard wire (d = 4.65, C = 7) needs 6.8 active coils, so L_s ≈ 40.7 mm with square and ground ends. The designed spring therefore sits at 69.7 mm (closed, 200 N) and 59.3 mm (open, 400 N). Mention this in one line in the exam.

Q 7.5 ME262 May 2023 Q4 — 8 marks

Design completely a close-coiled helical spring to absorb 500 N·m of energy whose mean diameter of coils is 8 times the wire diameter. The initial compression of the spring is 50 mm and the additional compression is 100 mm while absorbing the shock.

SOLUTION

Assumed Hardened and tempered alloy spring steel (e.g. 50Cr1V23, hot-coiled for this large wire), design shear stress τ = 500 MPa (≈ 0.5 S_{ut}, S_{ut} ≈ 1000 MPa at this size); G = 81 370 MPa; square and ground ends.

1. Stiffness and loads

The spring goes from 50 mm to 150 mm compression while absorbing U:

$$U = \tfrac{1}{2}k(150^2 - 50^2) = 500 \times 10^3 \text{ N·mm}$$

$$k = \frac{2(500 \times 10^3)}{20\,000} = 50 \text{ N/mm}$$

Initial load $P_1 = 50 \times 50 = 2500$ N; maximum load $P_{max} = 50 \times 150 = 7500$ N.

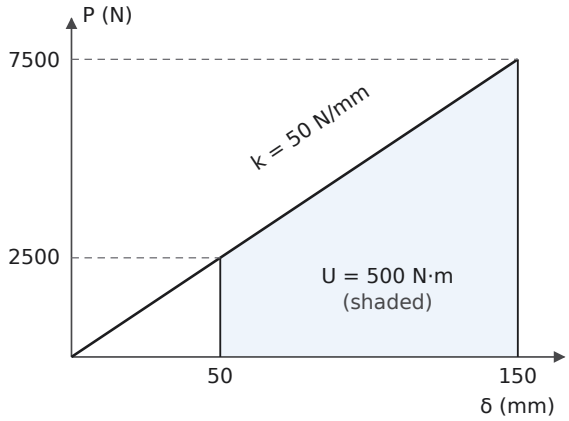

Fig. 7.5a Energy absorbed between 50 and 150 mm

2. Wire diameter

$$C = 8: \quad K = \frac{4(8) - 1}{4(8) - 4} + \frac{0.615}{8} = 1.184$$

$$\tau = K\frac{8P_{max}C}{\pi d^2} \Rightarrow d = \sqrt{\frac{1.184 \times 8(7500)(8)}{\pi(500)}} = 19.02 \text{ mm} \rightarrow d = 20 \text{ mm},\ D = 8d = 160 \text{ mm}$$

Actual stress $\tau = 1.184 \times \frac{8(7500)(8)}{\pi(20)^2} = 452.3$ MPa < 500 ✓.

3. Number of coils

$$N = \frac{81\,370(20)^4}{8(160)^3(50)} = 7.95 \rightarrow 8,\ N_t = 10$$

Actual k = 49.66 N/mm. Between 50 and 150 mm it stores 496.6 N·m, about 500 N·m (exactly 500 N·m needs an additional compression of 100.45 mm).

4. Lengths, pitch, buckling

$L_s = 10 \times 20 = 200$ mm; $L_f = 200 + 150 + 0.15(150) = 372.5 \rightarrow 375$ mm; $p = 375/9 = 41.7$ mm. $L_f/D = 375/160 = 2.34 < 2.6$, so the spring is stable without a guide.

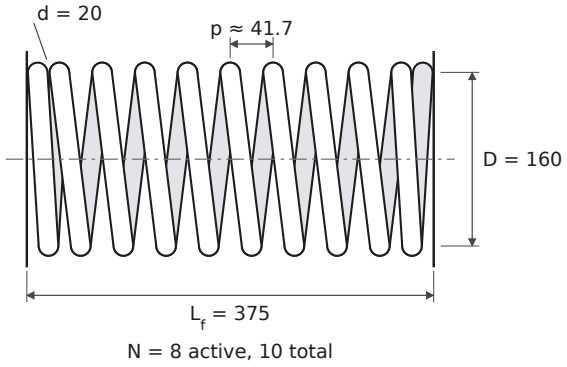

Fig. 7.5b Q 7.5: shock-absorbing spring (mm)

Answer. k = 50 N/mm, P_{max} = 7.5 kN; d = 20 mm, D = 160 mm (C = 8), τ = 452 MPa; N = 8 active, N_t = 10; L_s = 200, L_f = 375, p = 41.7 mm; L_f/D = 2.34.

Exam tip A common mistake is to use U = ½kδ² with δ = 100 mm. The spring is already compressed by 50 mm, so the energy is the trapezoid between 50 and 150 mm, not the triangle.

Q 7.6 AE302 May 2024 Q4 — 8 marks

Design completely a close-coiled helical spring to carry a fluctuating load varying between 500 N and 1000 N. The spring index may be taken as 6 and the factor of safety should be 1.5.

SOLUTION

Assumed Oil-hardened and tempered steel wire, S_{ut} = 1430 MPa; $S'_{se} = 0.21S_{ut} = 300.3$ MPa; $S_{sy} = 0.42S_{ut} = 600.6$ MPa; G = 81 370 MPa. The question gives no stiffness, so assume a deflection of 10 mm between 500 N and

1000 N (k = 50 N/mm). Square and ground ends.

1. Mean and alternating loads, stress factors

$$P_m = \frac{1000+500}{2} = 750\ \text{N}, \qquad P_a = \frac{1000-500}{2} = 250\ \text{N}$$

$$K_s = 1 + \frac{0.5}{6} = 1.0833, \qquad K = \frac{4(6)-1}{4(6)-4} + \frac{0.615}{6} = 1.2525$$

$$\tau_m = K_s \frac{8P_mC}{\pi d^2} = \frac{1.0833 \times 8(750)(6)}{\pi d^2} = \frac{12\,414}{d^2}, \qquad \tau_a = K\frac{8P_aC}{\pi d^2} = \frac{1.2525 \times 8(250)(6)}{\pi d^2} = \frac{4784}{d^2}$$

2. Wire diameter from the fatigue line

Bhandari's line for springs joins $(S'_{se}/2,\ S'_{se}/2)$ to $(S_{sy},\ 0)$:

$$\frac{1}{f_s} = \frac{\tau_m - \tau_a}{S_{sy}} + \frac{2\tau_a}{S'_{se}} \ \Rightarrow\ \frac{1}{1.5} = \frac{7630}{600.6\,d^2} + \frac{2(4784)}{300.3\,d^2} = \frac{12.70 + 31.86}{d^2}$$

$$d^2 = 1.5 \times 44.57 = 66.85\ \Rightarrow\ d = 8.18\ \text{mm}\ \rightarrow\ d = 8.5\ \text{mm}, \quad D = 6d = 51\ \text{mm}$$

Check: $\tau_m = 171.8$ MPa and $\tau_a = 66.2$ MPa, giving $f_s = 1.62 \geq 1.5$ ✓.

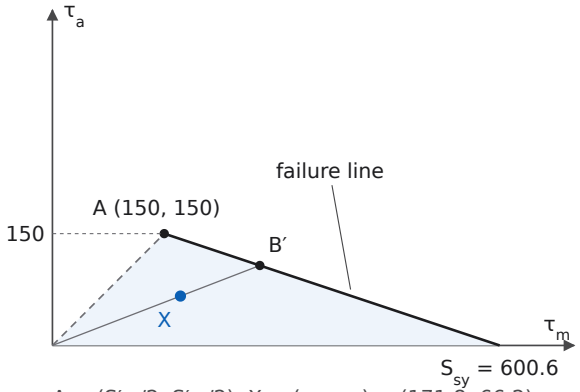

A = (S′se/2, S′se/2); X = (τm, τa) = (171.8, 66.2)
fc = OB′/OX = 1.62

Fig. 7.6a Spring fatigue diagram (MPa)

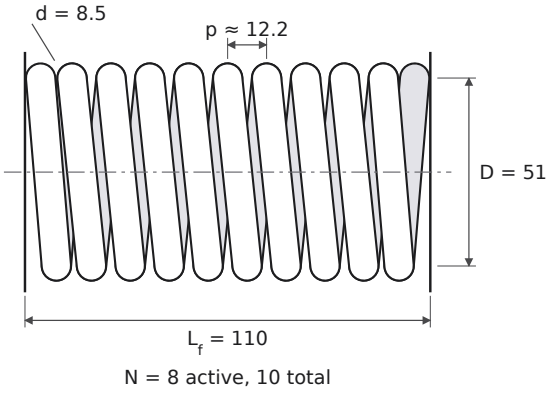

Fig. 7.6b Q 7.6: spring for fluctuating load (mm)

3. Coils (with k = 50 N/mm)

$$N = \frac{Gd^4}{8D^3k} = \frac{81\,370(8.5)^4}{8(51)^3(50)} = 8.0\ \rightarrow\ N = 8$$

$N_t = 10$; actual k = 50.03 N/mm; δ_{max} = 1000/50.03 = 20.0 mm.

4. Lengths and checks

$L_s = 10(8.5) = 85$ mm; $L_f = 85 + 20 + 0.15(20) = 108 \rightarrow 110$ mm; $p = 110/9 = 12.2$ mm.

$L_f/D = 2.16 < 2.6$: no buckling. Closed solid: P = 50.03(25) = 1251 N, τ = 331 MPa < S_{sy} ✓.

Answer. d = 8.5 mm, D = 51 mm (C = 6); τ_m = 171.8, τ_a = 66.2 MPa, f_s = 1.62; with the assumed k = 50 N/mm: N = 8, N_t = 10, L_s = 85, L_f = 110, p = 12.2 mm.

Exam tip K_s for τ_m, full Wahl K for τ_a: curvature is a stress concentration and matters only for the fluctuating part. The wire size does not depend on the assumed stiffness.

8 Shafts and keys

Hollow vs solid shafts, equivalent moments, keys, and the big one: a shaft carrying gears and pulleys designed by the ASME code. Some shaft design question appears in nearly every paper.

KEY FORMULAS

- Power and torque: $T = \dfrac{60 \times 10^6\, P}{2\pi N}$ N·mm (P in kW). Belt: $T = (T_1 - T_2)\,\dfrac{D}{2}$. Spur gear: $F_t = \dfrac{2T}{D}$, $F_r = F_t \tan\alpha$
- Equivalent torque and bending moment: $T_e = \sqrt{M^2 + T^2} = \dfrac{\pi}{16}\tau d^3$, $M_e = \frac{1}{2}\left[M + \sqrt{M^2 + T^2}\right] = \dfrac{\pi}{32}\sigma_b d^3$
- ASME code: $d^3 = \dfrac{16}{\pi\tau}\sqrt{(K_b M)^2 + (K_t T)^2}$; hollow: replace d^3 by $d_o^3(1-k^4)$, $k = d_i/d_o$
- ASME allowable: $\tau = 0.30 S_{yt}$ or $0.18 S_{ut}$, whichever is smaller; multiply by 0.75 if there are keyways
- Shock factors (rotating shaft): load gradually applied $K_b = 1.5,\ K_t = 1.0$; sudden, minor shock $K_b = 1.5$–$2.0,\ K_t = 1.0$–1.5; heavy shock $K_b = 2$–$3,\ K_t = 1.5$–3
- Resultant BM at a section: $M = \sqrt{M_V^2 + M_H^2}$
- Key: $T = \tau\, b\, l\, \dfrac{d}{2}$ (shear), $T = \sigma_c\, \dfrac{h}{2}\, l\, \dfrac{d}{2}$ (crushing); Kennedy key $T = \sqrt{2}\,\tau\, b\, l\, d$

Theory

Q 8.1 ME304 End-sem May 2023 Q1(b) · ME304 End-sem May 2024 Q1(d) · ME262 May/June 2019 Q1(e) 2 marks

Show that a hollow shaft is stronger (and stiffer) than a solid shaft of the same weight, length and material.

SOLUTION

Same weight, length and material means the same cross-sectional area. Let the solid shaft have diameter d and the hollow shaft d_o, $d_i = k d_o$:

$$\frac{\pi}{4}d^2 = \frac{\pi}{4}d_o^2(1-k^2) \;\Rightarrow\; d = d_o\sqrt{1-k^2}$$

Strength (torsion or bending) is proportional to the section modulus, $T = \tau Z_p$ with $Z_p = \pi d^3/16$ (solid) or $\pi d_o^3(1-k^4)/16$ (hollow):

$$\frac{T_{hollow}}{T_{solid}} = \frac{d_o^3(1-k^4)}{d^3} = \frac{(1-k^4)}{(1-k^2)^{3/2}} = \frac{1+k^2}{\sqrt{1-k^2}} > 1$$

Stiffness is proportional to J (torsion) or I (bending):

$$\frac{J_{hollow}}{J_{solid}} = \frac{d_o^4(1-k^4)}{d^4} = \frac{1+k^2}{1-k^2} > 1$$

Example, $k = 0.5$: $d_o = d/\sqrt{0.75} = 1.155d$. Strength ratio $= 1.25/\sqrt{0.75} = 1.44$; stiffness ratio $= 1.25/0.75 = 1.67$. A hollow shaft with the same weight carries 44% more torque and is 67% stiffer.

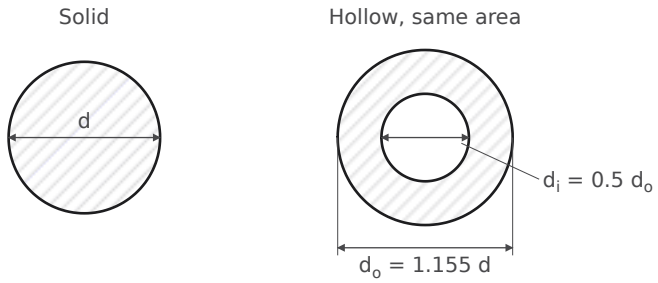

Fig. 8.1 Solid and hollow sections of equal area (k = 0.5)

Reason: the stress is zero at the axis and largest at the surface. A hollow shaft removes the lightly stressed core and puts the material at a larger radius, where it contributes more to Z and J.

Q 8.2 CME-403 Nov 2024 Q2(c) — 2 marks

A shaft of diameter d is subjected to a torque T and a bending moment M. Find expressions for an equivalent bending moment and equivalent torque.

SOLUTION

At the surface: bending stress $\sigma = \dfrac{32M}{\pi d^3}$, torsional shear stress $\tau = \dfrac{16T}{\pi d^3}$ (Fig. 8.2).

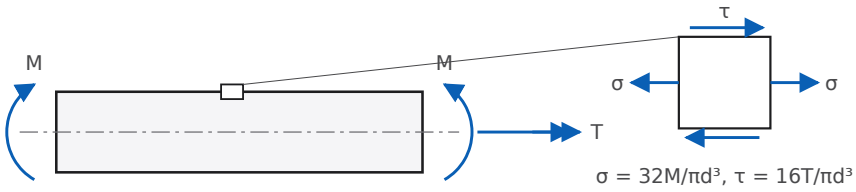

Fig. 8.2 Shaft under combined bending and torsion; element at the surface

Equivalent torque (maximum shear stress theory, ductile material):

$$\tau_{max} = \sqrt{\left(\tfrac{\sigma}{2}\right)^2 + \tau^2} = \frac{16}{\pi d^3}\sqrt{M^2 + T^2} = \frac{16\,T_e}{\pi d^3} \;\Rightarrow\; T_e = \sqrt{M^2 + T^2}$$

Equivalent bending moment (maximum normal stress theory, brittle material):

$$\sigma_{max} = \frac{\sigma}{2} + \sqrt{\left(\tfrac{\sigma}{2}\right)^2 + \tau^2} = \frac{16}{\pi d^3}\left[M + \sqrt{M^2 + T^2}\right] = \frac{32\,M_e}{\pi d^3} \;\Rightarrow\; M_e = \tfrac{1}{2}\left[M + \sqrt{M^2 + T^2}\right]$$

T_e is the pure torque that gives the same τ_{max}, and M_e is the pure bending moment that gives the same σ_{max}, as the actual combination.

Q 8.3 CME-403 Nov 2024 Q2(d) · ME262 May/June 2019 Q1(c) — 2 + 2 marks

Explain failure of square key in shear and crushing; write related equations. What is a Kennedy key?

How is it designed?

SOLUTION

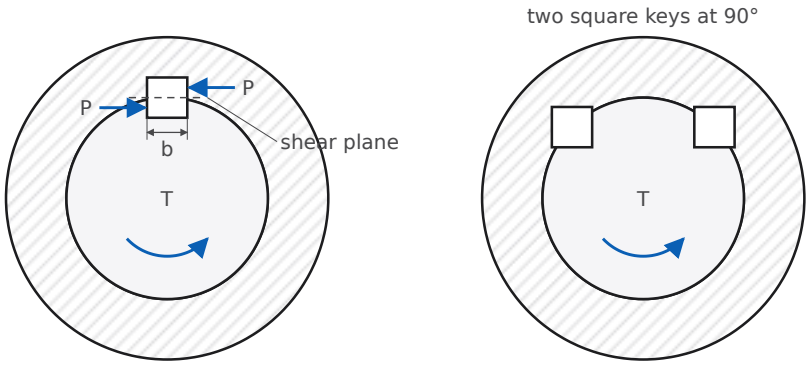

Fig. 8.3 (a) Forces on a sunk key; (b) Kennedy key

Square key ($b = h$, length l). The torque is transmitted as a pair of forces $P = \dfrac{2T}{d}$: the shaft pushes on the lower half of one face and the hub pushes back on the upper half of the opposite face.

- **Shear failure**: the key shears along the plane at the shaft–hub interface, area $b\,l$:

$$\tau = \frac{P}{b\,l} = \frac{2T}{b\,l\,d} \;\Rightarrow\; T = \tau\, b\, l\, \frac{d}{2}$$

- **Crushing failure**: the side face in contact with the hub (or shaft) is crushed, area $\frac{h}{2}\,l$:

$$\sigma_c = \frac{P}{(h/2)\,l} = \frac{4T}{h\,l\,d} \;\Rightarrow\; T = \sigma_c\, \frac{h}{2}\, l\, \frac{d}{2}$$

- For a square key the two strengths are equal when $\sigma_c = 2\tau$, which is roughly true for key steels, so a square key is equally strong in shear and crushing.

Kennedy key: two square keys placed 90° apart, each fitted so that its diagonal lies along the shaft surface, with half of the key (a triangle) in the shaft and half in the hub (Fig. 8.3b). Each key is loaded across its diagonal plane, of area $\sqrt{2}\,b\,l$. It is used for heavy duty and for reversing torque, since one key takes the torque in each direction.

$$P = \tau\,(\sqrt{2}\,b\,l), \qquad T = 2\,P\,\frac{d}{2} = \sqrt{2}\,\tau\,b\,l\,d$$

Design: choose b from the shaft diameter (standard key table) and find the length from $l = \dfrac{T}{\sqrt{2}\,\tau\,b\,d}$.

Combined bending and torsion

Q 8.4 ME-313 May 2019 Q4 · CME-403 Nov 2024 Q5 — 14 / 8 marks

A solid shaft is subjected to a twisting moment of 800 N·m and a bending moment of 200 N·m. If the maximum allowable values of normal and shear stresses are 140 N/mm² and 80 N/mm² respectively, determine the diameter of the shaft.

Variant (ME-313 (2nd paper) Q4, 14 marks): T = 600 N·m, M = 300 N·m (solved at the end).

SOLUTION

Loading as in Fig. 8.2: $T = 800 \times 10^3$ N·mm, $M = 200 \times 10^3$ N·mm. Design on both theories and take the larger diameter.

1. Maximum shear stress theory (equivalent torque)

$$T_e = \sqrt{M^2 + T^2} = \sqrt{200^2 + 800^2} \times 10^3 = 824.6 \times 10^3 \text{ N·mm}$$

$$d = \left(\frac{16\,T_e}{\pi\tau}\right)^{1/3} = \left(\frac{16(824.6 \times 10^3)}{\pi(80)}\right)^{1/3} = 37.44 \text{ mm}$$

2. Maximum normal stress theory (equivalent bending moment)

$$M_e = \tfrac{1}{2}\left[M + \sqrt{M^2 + T^2}\right] = \tfrac{1}{2}(200 + 824.6) \times 10^3 = 512.3 \times 10^3 \text{ N·mm}$$

$$d = \left(\frac{32\,M_e}{\pi\sigma_b}\right)^{1/3} = \left(\frac{32(512.3 \times 10^3)}{\pi(140)}\right)^{1/3} = 33.40 \text{ mm}$$

3. Selection and check

Shear governs: $d = 37.44 \to 38$ mm (standard). With $d = 38$: $\tau_{max} = \dfrac{16(824.6 \times 10^3)}{\pi(38)^3} = 76.5$ MPa ≤ 80; $\sigma_{max} = \dfrac{32(512.3 \times 10^3)}{\pi(38)^3} = 95.1$ MPa ≤ 140.

> **Answer.** d = 38 mm (37.44 mm by max. shear stress theory governs; 33.40 mm by max. normal stress theory).

Variant: T = 600 N·m, M = 300 N·m

$T_e = \sqrt{300^2 + 600^2} = 670.8$ N·m, giving $d = (16 \times 670.8 \times 10^3/80\pi)^{1/3} = 34.95$ mm. $M_e = \tfrac{1}{2}(300 + 670.8) = 485.4$ N·m, giving $d = (32 \times 485.4 \times 10^3/140\pi)^{1/3} = 32.81$ mm.

> **Answer (variant).** d = 35 mm (34.95 mm by shear governs; at 35 mm, τ = 79.7 MPa, σ = 115.3 MPa).

Exam tip When both allowable stresses are given, examiners expect both T_e and M_e and the larger diameter. With $\sigma/\tau \leq 2$ the shear criterion almost always governs.

Shafts with gears and pulleys (ASME code)

Q 8.5 ME304 End-sem May 2024 Q3 — 8 marks

A horizontal hollow shaft is simply supported on two bearings 850 mm apart. A spur gear with 20° full depth profile and PCD of 250 mm is keyed to the shaft at a distance of 200 mm from the left hand bearing and transmits torque vertically downward to a gear. A 600 mm diameter pulley is mounted on the shaft at a distance of 250 mm from the right hand bearing and receives 30 kW at 280 rpm from a belt drive located horizontally to the right of the shaft so that the tension in slack side is one third the tight side with angle of wrap of 180° and coefficient of friction for belt and pulley 0.24. Design the shaft as per ASME shafting code if the allowable bending and shearing stress in the shaft material are 80 MPa and 45 MPa respectively. Assume the shock factor for bending and torsion as 1.5 and the ratio of diameters be 0.5.

SOLUTION

Assumed "Transmits torque vertically downward" is read as the tangential tooth force F_t acting vertically downward on the gear. The mating gear is then beside the shaft and F_r is horizontal. F_r on the gear points away from the mating gear; the mating gear is taken on the left, so F_r acts to the right, in the same sense as the belt pull (the worse case). Pulley and shaft weights are not given and are neglected.

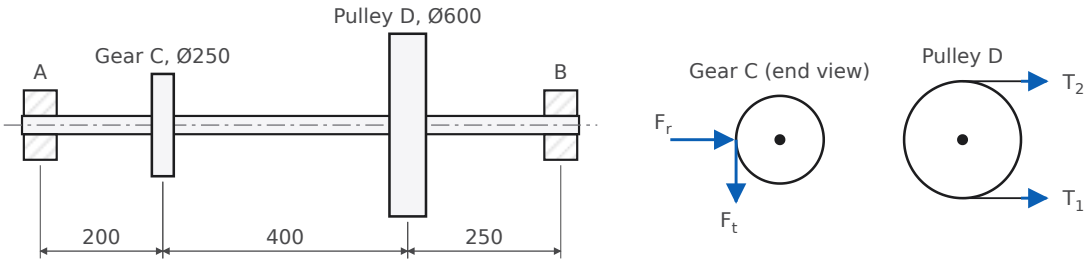

Fig. 8.5a Shaft layout (mm) and end views showing the force directions

1. Torque, gear and belt forces

$$T = \frac{60 \times 10^6 (30)}{2\pi(280)} = 1\,023\,139 \text{ N·mm}$$

Gear: $F_t = \dfrac{T}{125} = 8185$ N (vertical), $F_r = 8185 \tan 20^\circ = 2979$ N (horizontal).

Pulley: $T_1 - T_2 = \dfrac{T}{300} = 3410$ N with $T_2 = T_1/3$, so $T_1 = 5116$ N, $T_2 = 1705$ N; $T_1 + T_2 = 6821$ N, horizontal.

Assumed With μ = 0.24 and θ = π, $e^{\mu\theta} = 2.13$, which contradicts the stated ratio 3. The question states $T_2 = T_1/3$ explicitly, so that ratio is used.

2. Bending moments

Vertical plane (F_t at C): $R_A = 8185(650)/850 = 6259$ N, $R_B = 1926$ N. $M_C = 6259(200) = 1\,251\,841$ N·mm, $M_D = 1926(250) = 481\,477$ N·mm.

Horizontal plane (F_r at C, $T_1 + T_2$ at D): $R_B = [2979(200) + 6821(600)]/850 = 5516$ N, $R_A = 4284$ N. $M_C = 4284(200) = 856\,864$ N·mm, $M_D = 5516(250) = 1\,378\,936$ N·mm.

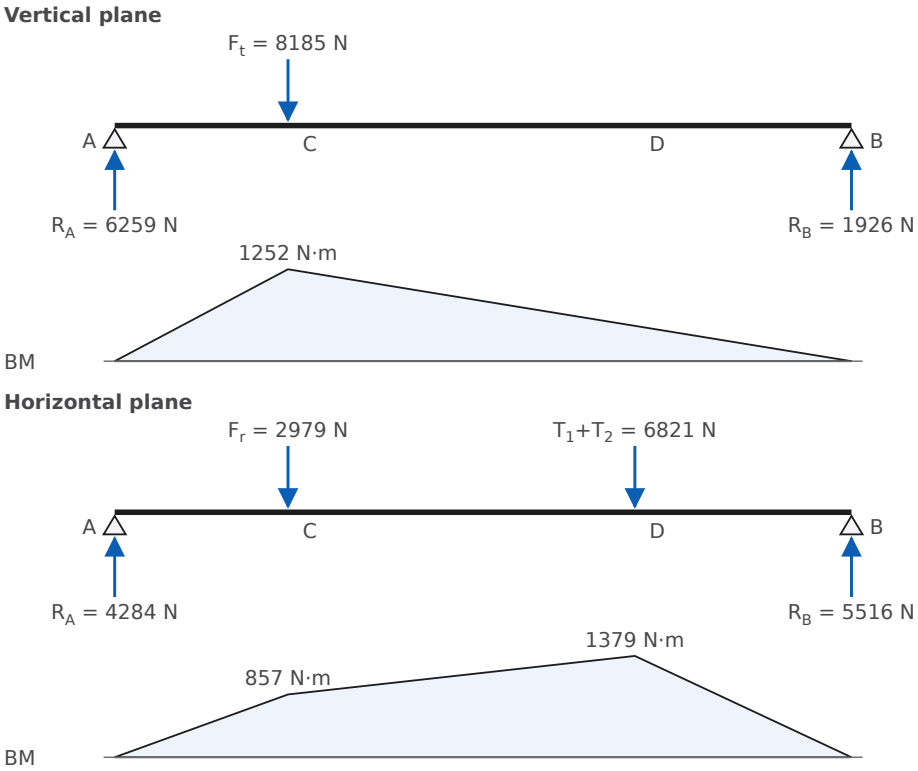

Fig. 8.5b Loading and bending-moment diagrams. Horizontal-plane loads are drawn in plan view.

Resultant: $M_C = \sqrt{1251.8^2 + 856.9^2} = 1517.0$ N·m; $M_D = \sqrt{481.5^2 + 1378.9^2} = 1460.6$ N·m. **C is critical**: $M = 1\,517\,010$ N·mm, and the torque T acts between C and D.

3. Diameter by the ASME code (hollow, k = 0.5)

$K_bM = 1.5(1\,517\,010) = 2\,275\,515$ N·mm, $K_tT = 1.5(1\,023\,139) = 1\,534\,708$ N·mm, $\sqrt{(K_bM)^2 + (K_tT)^2} = 2\,744\,686$ N·mm. Also $1 - k^4 = 0.9375$.

Shear (τ = 45 MPa):

$$d_o^3 = \frac{16(2\,744\,686)}{\pi(45)(0.9375)} = 331\,344 \;\Rightarrow\; d_o = 69.20 \text{ mm}$$

Normal stress (σ = 80 MPa), the ASME code's max normal stress form:

$$d_o^3 = \frac{16\left[K_bM + \sqrt{(K_bM)^2 + (K_tT)^2}\right]}{\pi\sigma(1 - k^4)} = \frac{16(5\,020\,201)}{\pi(80)(0.9375)} = 340\,902 \;\Rightarrow\; d_o = 69.86 \text{ mm}$$

Take $d_o = 70$ mm, $d_i = 0.5(70) = 35$ mm. Check: $\tau = 43.5$ MPa ≤ 45, $\sigma = 79.5$ MPa ≤ 80.

Answer. Hollow shaft d_o = 70 mm, d_i = 35 mm. Critical section at the gear (M = 1517 N·m, T = 1023 N·m); τ = 43.5 MPa, σ = 79.5 MPa.

Exam tip Always compute the resultant BM at *every* load point: here C and D differ by only 4%. Drawing the vertical and horizontal planes separately and combining them is where most marks are given.

Q 8.6 AE-311 Jul 2021 Q2 — 14 marks

A line shaft supporting two pulleys A and B is shown in Fig-1. Power is supplied to the shaft by means of a vertical belt on pulley A, which is then transmitted to pulley B carrying a horizontal belt. The ratio of belt tensions on tight and loose sides is 4:1. The maximum tension in belt is limited to 4 kN. The pulleys are keyed to the shaft. Determine the diameter of the shaft according to A.S.M.E code if it is subjected to gradually applied load. *(Fig-1: bearings C and D 900 mm apart; pulley A, Ø250, vertical belt with tensions P_1, P_2 downward, at mid-span; pulley B, Ø450, horizontal belt with tensions P_3, P_4, overhanging 250 mm beyond the right bearing.)*

SOLUTION

Assumed Shaft material 40C8 ($S_{ut} = 650$, $S_{yt} = 380$ MPa), as in Bhandari's version of this problem. Gradually applied load on a rotating shaft: $K_b = 1.5$, $K_t = 1.0$. Pulley weights are neglected.

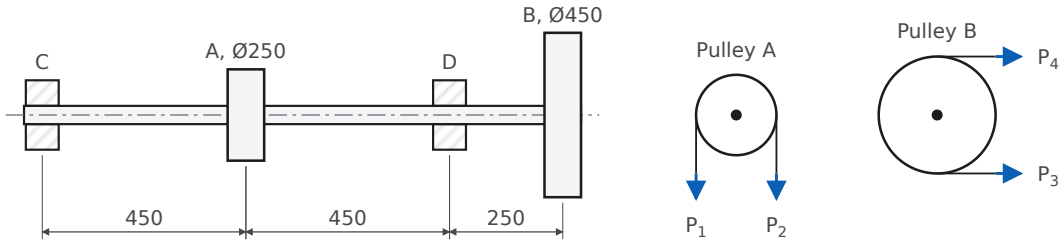

Fig. 8.6a Line shaft of Fig-1 redrawn (mm)

1. Belt tensions

Both pulleys carry the same torque, so the smaller pulley A has the larger tension difference. The 4 kN limit therefore applies to belt A: $P_1 = 4000$ N, $P_2 = 1000$ N.

$$T = (P_1 - P_2)\frac{250}{2} = 3000(125) = 375\,000 \text{ N·mm}$$

Pulley B: $(P_3 - P_4)(225) = 375\,000 \Rightarrow P_3 - P_4 = 1667$ N, with $P_3 = 4P_4$: $P_4 = 556$ N, $P_3 = 2222$ N, $P_3 + P_4 = 2778$ N.

Assumed If 4 kN were placed on belt B, belt A would need $P_1 = 7.2$ kN, which breaks the stated 4 kN limit.

2. Bending moments

Vertical plane: $P_1 + P_2 = 5000$ N at mid-span A: $R_C = R_D = 2500$ N, $M_A = 2500(450) = 1\,125\,000$ N·mm, $M_D = 0$.

Horizontal plane: 2778 N at B (overhang): $M_D = 2778(250) = 694\,444$ N·mm (hogging). $R_D = 2778(1150)/900 = 3549$ N, $R_C = -772$ N, so $M_A = -772(450) = -347\,222$ N·mm.

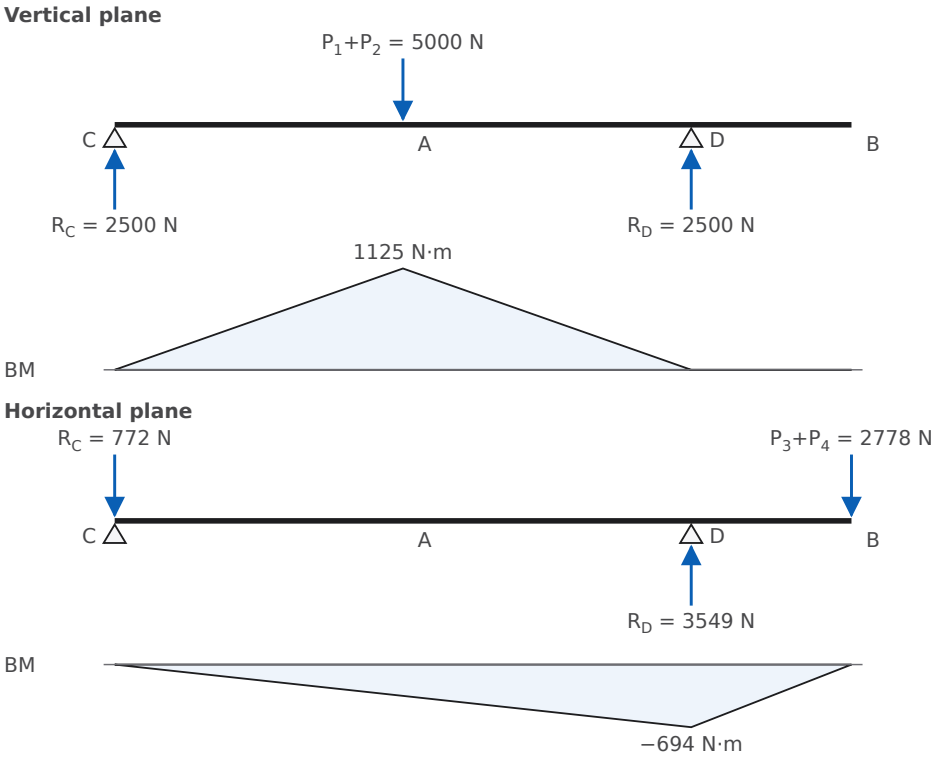

Fig. 8.6b Loading and BM diagrams (horizontal plane drawn in plan)

Resultant: $M_A = \sqrt{1125^2 + 347.2^2} = 1177.4$ N·m; $M_D = 694.4$ N·m. **A is critical**: $M = 1\,177\,365$ N·mm, and the torque T acts between A and B.

3. ASME allowable stress and diameter

$$\tau = 0.75 \times \min(0.30 \times 380,\ 0.18 \times 650) = 0.75 \times \min(114,\ 117) = 85.5\ \text{MPa}$$

$$d^3 = \frac{16}{\pi(85.5)}\sqrt{(1.5 \times 1\,177\,365)^2 + (1.0 \times 375\,000)^2} = \frac{16(1\,805\,422)}{\pi(85.5)} = 107\,543$$

$d = 47.55$ mm, so take $d = 50$ mm. Check: $\tau = \dfrac{16(1\,805\,422)}{\pi(50)^3} = 73.6$ MPa ≤ 85.5.

> **Answer.** d = 50 mm (40C8, ASME τ = 85.5 MPa). Belt tensions P_1 = 4 kN, P_2 = 1 kN, P_3 = 2.22 kN, P_4 = 0.56 kN; critical section at pulley A, M = 1177 N·m, T = 375 N·m.

Q 8.7 ME262 May/June 2019 Q4 — 8 marks

A machine shaft is supported in bearings placed at a distance of 750 mm. The shaft carries a Ø450 mm pulley at a distance of 200 mm on right side of right hand bearing (overhung), and a spur gear Ø200 mm at a distance of 250 mm on the right of left hand bearing. 15 kW power is supplied to spur (20° pressure angle) at 600 rpm and taken off at pulley on which belt is mounted directly below it.

The ratio of belt tensions is 3:1. The gear meshes with pinion located directly above the shaft. Given UTS for shaft = 500 MPa and YS = 310 MPa. Use ASME code of shaft design and assume K_m and K_t as 1.25.

SOLUTION

Assumed The pinion is directly above, so the pitch point is at the top of the gear. F_t is horizontal there, and F_r acts vertically downward, towards the gear centre. The belt hangs vertically downward. Weights are neglected; the gear and pulley are keyed.

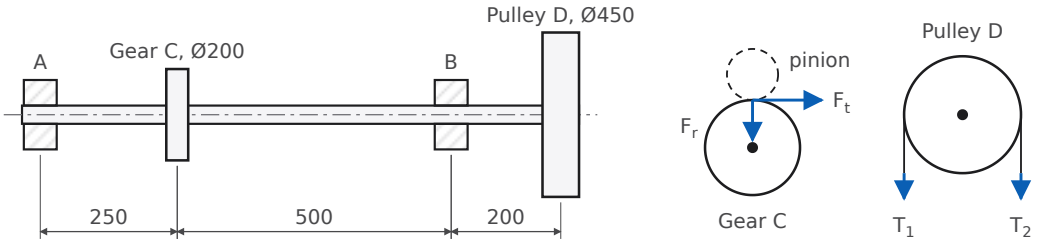

Fig. 8.7a Shaft layout (mm) and force directions

1. Forces

$$T = \frac{60 \times 10^6 (15)}{2\pi (600)} = 238\,732 \text{ N·mm}$$

Gear: $F_t = \dfrac{238\,732}{100} = 2387$ N (horizontal), $F_r = 2387 \tan 20^\circ = 869$ N (down).

Pulley: $T_1 - T_2 = \dfrac{238\,732}{225} = 1061$ N, $T_1 = 3T_2$: $T_2 = 531$ N, $T_1 = 1592$ N; $T_1 + T_2 = 2122$ N (down).

2. Bending moments

Vertical plane: $R_B = [869(250) + 2122(950)]/750 = 2978$ N, $R_A = 869 + 2122 - 2978 = 13$ N. $M_C = 13.4(250) = 3348$ N·mm (practically zero), $M_B = 2122(200) = 424\,413$ N·mm (hogging).

Horizontal plane: $R_A = 2387(500)/750 = 1592$ N, $R_B = 796$ N. $M_C = 1592(250) = 397\,887$ N·mm, $M_B = 0$.

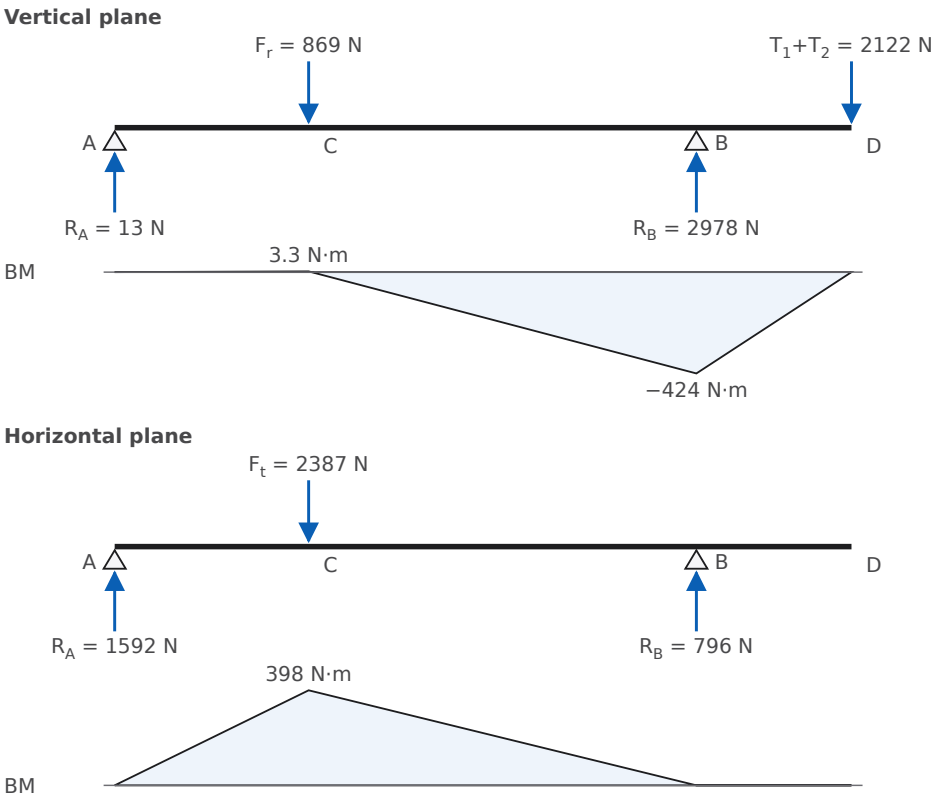

Fig. 8.7b Loading and BM diagrams

Resultant: $M_C = \sqrt{3.35^2 + 397.9^2} = 397.9$ N·m; $M_B = 424.4$ N·m. **The right bearing B is critical**: $M = 424\,413$ N·mm, and T acts there (between gear and pulley).

3. ASME code

$$\tau = 0.75 \times \min(0.30 \times 310,\ 0.18 \times 500) = 0.75 \times \min(93,\ 90) = 67.5 \text{ MPa}$$

$$d^3 = \frac{16}{\pi(67.5)}\sqrt{(1.25 \times 424\,413)^2 + (1.25 \times 238\,732)^2} = \frac{16(608\,687)}{\pi(67.5)} = 45\,926 \ \Rightarrow\ d = 35.81 \text{ mm}$$

Take $d = 38$ mm. Check: $\tau = 16(608\,687)/[\pi(38)^3] = 56.5$ MPa ≤ 67.5.

> **Answer.** d = 38 mm. ASME τ = 67.5 MPa; critical section at the right bearing (M = 424.4 N·m, T = 238.7 N·m).

> **Exam tip** With an overhung pulley, the bearing next to it is often the critical section even though no load acts there. Read the BM at the bearing directly: overhang load × overhang length.

Q 8.8 ME262 May 2023 Q3 — 8 marks

A countershaft made of cold-rolled steel transmits 40 kW at 320 rpm and is supported on bearings 1.5 m apart. It carries two pulleys mounted upon it. One pulley is 0.45 m in diameter and is located 0.38 m to the right of left hand bearing and it receives power in a horizontal direction from a pulley at its right. The second pulley 0.635 m in diameter is located 0.45 m to the left of the right hand bearing and delivers power in a vertical direction to a machine below it. Design the shaft and compare the stress developed in the shaft with the design stress as obtained from the code.

SOLUTION

Assumed The belt tension ratio is not given: $T_1/T_2 = e^{\mu\theta}$ with μ = 0.3 and θ = 180°, giving $e^{0.3\pi} = 2.566$ for both belts. Pulley weights are neglected. Cold-rolled (cold-drawn) carbon steel ≈ 35C8 cold drawn: $S_{ut} = 550$ MPa, $S_{yt} = 460$ MPa. Load gradually applied: $K_b = 1.5$, $K_t = 1.0$. Pulleys are keyed.

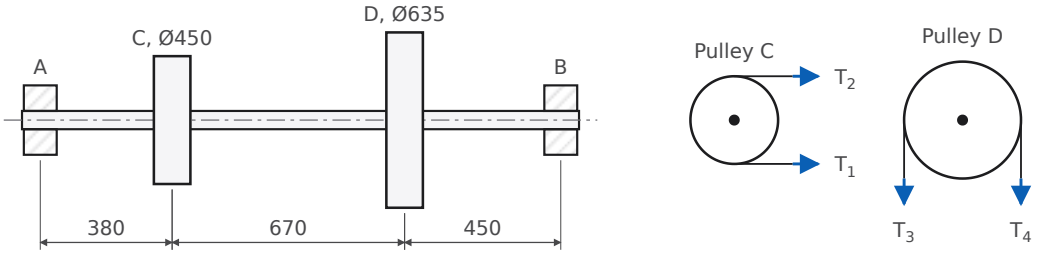

Fig. 8.8a Countershaft layout (mm)

1. Torque and belt pulls

$$T = \frac{60 \times 10^6 (40)}{2\pi (320)} = 1\,193\,662 \text{ N·mm}$$

Pulley C (Ø450, horizontal): $T_1 - T_2 = T/225 = 5305$ N, so $T_2 = 5305/1.566 = 3387$ N, $T_1 = 8692$ N; pull = $12\,079$ N.

Pulley D (Ø635, vertical, down): $T_3 - T_4 = T/317.5 = 3760$ N, so $T_4 = 2400$ N, $T_3 = 6160$ N; pull = 8560 N.

2. Bending moments

Vertical plane (8560 N at D): $R_A = 8560(450)/1500 = 2568$ N, $R_B = 5992$ N. $M_C = 2568(380) = 975\,844$, $M_D = 5992(450) = 2\,696\,411$ N·mm.

Horizontal plane (12 079 N at C): $R_A = 12\,079(1120)/1500 = 9019$ N, $R_B = 3060$ N. $M_C = 9019(380) = 3\,427\,261$, $M_D = 3060(450) = 1\,377\,024$ N·mm.

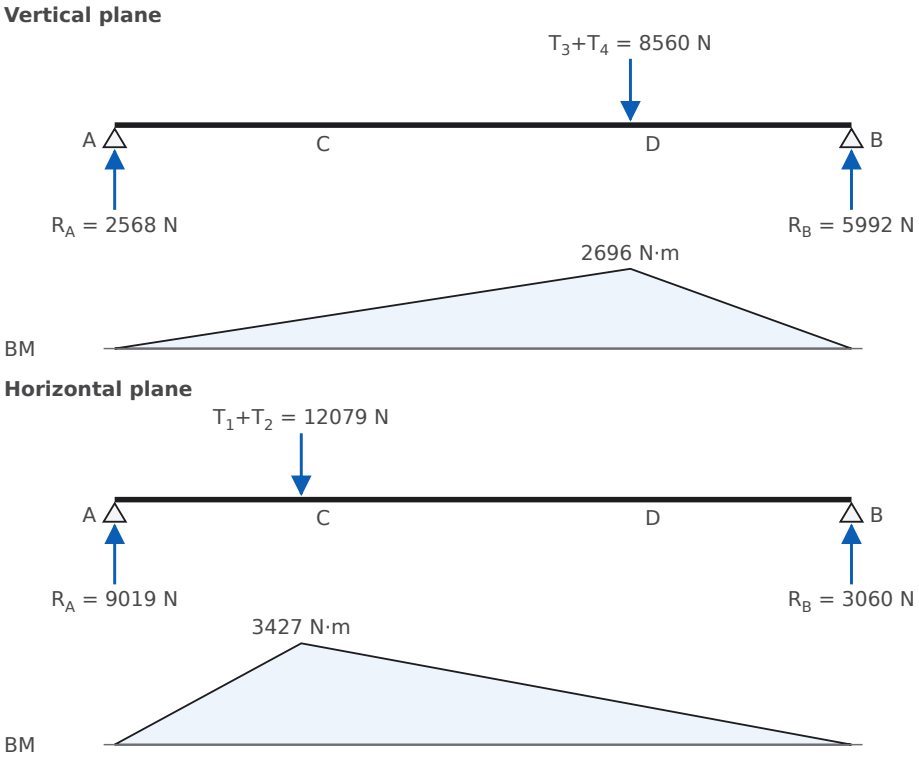

Fig. 8.8b Loading and BM diagrams

Resultant: $M_C = \sqrt{975.8^2 + 3427.3^2} = 3563.5$ N·m; $M_D = \sqrt{2696.4^2 + 1377.0^2} = 3027.7$ N·m. **C is critical**.

3. Code design stress and diameter

$$\tau_d = 0.75 \times \min(0.30 \times 460,\ 0.18 \times 550) = 0.75 \times \min(138,\ 99) = 74.25 \text{ MPa}$$

$$d^3 = \frac{16}{\pi(74.25)}\sqrt{(1.5 \times 3\,563\,480)^2 + (1.0 \times 1\,193\,662)^2} = \frac{16(5\,476\,879)}{\pi(74.25)} = 375\,670$$

$d = 72.16$ mm, so take $d = 75$ mm (standard).

4. Stress developed vs code design stress

$$\tau_{max} = \frac{16\sqrt{(K_b M)^2 + (K_t T)^2}}{\pi d^3} = \frac{16(5\,476\,879)}{\pi(75)^3} = 66.1 \text{ MPa}$$

The stress developed, 66.1 MPa, is 89% of the code design stress of 74.25 MPa (11% reserve), because the computed 72.16 mm was rounded up to the 75 mm standard size.

> **Answer.** d = 75 mm (cold-drawn steel, keyed). Critical section at pulley C: M = 3563 N·m, T = 1194 N·m. Developed τ = 66.1 MPa vs code τ_d = 74.25 MPa.

Exam tip If the steel is bought without a specification ("commercial shafting"), the ASME code allows τ = 55 MPa, or 40 MPa with keyways. With 40 MPa this shaft would need d = 88.7, so 90 mm. State which value you use.

Q 8.9 AE302 May 2024 Q3 — 8 marks

A line shaft is to transmit 30 kW at 160 rpm. It is driven by a motor placed below it by means of a belt running at 45° to the vertical on a 1000 mm diameter pulley keyed to the end of the shaft. The tension on the tight side of the belt is 2.5 times that on the slack side and the center of the pulley overhangs 150 mm beyond the center line of the end bearing. Design the shaft if the allowable shear stress is 55 N/mm² and the weight of the pulley is 1.6 kN.

SOLUTION

Assumed No shock factors are given, so the shaft is designed on the equivalent torque $T_e = \sqrt{M^2 + T^2}$ (max shear stress theory). The pulley acts as a cantilever load about the end bearing.

1. Torque and belt tensions

$$T = \frac{60 \times 10^6 (30)}{2\pi(160)} = 1\,790\,493 \text{ N·mm}$$

$T_1 - T_2 = T/500 = 3581$ N with $T_1 = 2.5T_2$: $T_2 = 2387$ N, $T_1 = 5968$ N; belt pull $T_1 + T_2 = 8356$ N along the belt, at 45° to the vertical, downward.

2. Resultant load on the pulley

Vertical: $8356\cos 45^\circ + 1600 = 5908 + 1600 = 7508$ N. Horizontal: $8356 \sin 45^\circ = 5908$ N.

$$R = \sqrt{7508^2 + 5908^2} = 9554 \text{ N} \quad (\text{at } 38.2^\circ \text{ to the vertical})$$

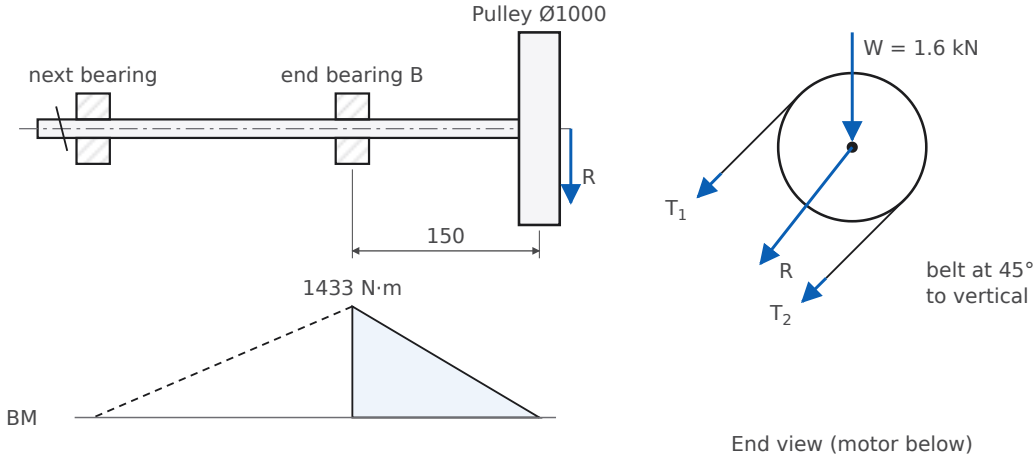

Fig. 8.9 Overhung pulley, BM diagram and end view of the forces

3. Bending moment and equivalent torque

Maximum BM at the end bearing: $M = 9554(150) = 1\,433\,134$ N·mm.

$$T_e = \sqrt{M^2 + T^2} = \sqrt{1\,433\,134^2 + 1\,790\,493^2} = 2\,293\,412 \text{ N·mm}$$

$$d = \left(\frac{16\,T_e}{\pi\tau}\right)^{1/3} = \left(\frac{16(2\,293\,412)}{\pi(55)}\right)^{1/3} = 59.66 \text{ mm} \;\rightarrow\; 60 \text{ mm}$$

Check: $\tau = 16(2\,293\,412)/[\pi(60)^3] = 54.1$ MPa ≤ 55.

Answer. d = 60 mm. T = 1790 N·m, resultant pulley load 9554 N, M at bearing = 1433 N·m, T_e = 2293 N·m.

Exam tip Add the pulley weight to the vertical component *before* combining with the horizontal one. If you apply ASME factors $K_b = 1.5$, $K_t = 1.0$, the diameter becomes 63.7, so 65 mm. Either is accepted if stated.

9 Couplings

Rigid protected flange couplings and bush-pin flexible couplings, designed with Bhandari's proportions. One of the two appears in most end-sem papers, usually as "design and draw".

KEY FORMULAS

- Flange coupling proportions: hub $D = 2d$, length $L = 1.5d$, PCD $D_1 = 3d$, flange OD $D_2 = 4d$, flange $t = 0.5d$, protecting rim $t_1 = 0.25d$
- Hub as hollow shaft: $\tau = \dfrac{16\,T\,D}{\pi(D^4 - d^4)}$; flange shear at the hub: $T = \dfrac{\pi D^2 t}{2}\,\tau$
- Bolts (fitted, shear): $T = \dfrac{\pi}{4} d_1^2\,\tau\,N\,\dfrac{D_1}{2}$; crushing: $T = d_1\,t\,\sigma_c\,N\,\dfrac{D_1}{2}$
- Key: $T = \tau\,b\,l\,\dfrac{d}{2} = \sigma_c\,\dfrac{h}{2}\,l\,\dfrac{d}{2}$, with l normally $= L$
- Bush-pin: $d_1 = \dfrac{0.5d}{\sqrt{N}}$; force per pin $W = p\,D_b\,l_b$, $T = W\,N\,\dfrac{D_1}{2}$; pin $\tau = \dfrac{4W}{\pi d_1^2}$, $\sigma_b = \dfrac{32\,W(l_b/2 + 5)}{\pi d_1^3}$

Rigid protected flange coupling

Q 9.1 ME304 End-sem May 2024 Q6 — 8 marks

Design a rigid protected type flange coupling made of FG200 for transmission of 30 kW from a motor to a centrifugal pump at 1448 rpm. Each half of the flange is keyed to the shaft using two keys located at 90° apart from each other. Diameter of motor shaft and pump shaft = 38 mm. No. of bolts = 6. Allowable shear stress for the bolts, keys and shaft made of SAE1030 = 55 MPa. Allowable shear stress for the cast iron flanges = 12 MPa. Assume crushing stress twice the shearing stress in all the cases.

SOLUTION

Assumed Bhandari's proportions; standard key for a 38 mm shaft (IS 2292): $b \times h = 10 \times 8$. σ_c = 110 MPa for the bolts and keys.

1. Torque and shaft check

$$T = \frac{60 \times 10^6 (30)}{2\pi(1448)} = 197\,845 \text{ N·mm}, \qquad \tau_{shaft} = \frac{16(197\,845)}{\pi(38)^3} = 18.4 \text{ MPa} \le 55$$

2. Hub and flange dimensions

$D = 2d = 76$, $L = 1.5d = 57$, $D_1 = 3d = 114$, $D_2 = 4d = 152$, $t = 0.5d = 19$, $t_1 = 0.25d = 9.5 \to 10$ mm.

Hub check: $\tau = \dfrac{16(197\,845)(76)}{\pi(76^4 - 38^4)} = 2.45$ MPa ≤ 12.

3. Keys (two keys at 90°, each carries T/2)

Shear: $\dfrac{T}{2} = \tau\,b\,l\,\dfrac{d}{2} \Rightarrow l = \dfrac{T}{\tau b d} = \dfrac{197\,845}{55(10)(38)} = 9.5$ mm. Crushing: $\dfrac{T}{2} = \sigma_c \dfrac{h}{2} l \dfrac{d}{2} \Rightarrow l = \dfrac{2T}{\sigma_c h d} = \dfrac{2(197\,845)}{110(8)(38)} =$ 11.8 mm.

Make the keys the full hub length, $l = 57$ mm: then $\tau = 9.1$ MPa and $\sigma_c = 22.8$ MPa, which is very safe.

4. Flange shear at the hub

$$\tau = \frac{2T}{\pi D^2 t} = \frac{2(197\,845)}{\pi(76)^2(19)} = 1.15 \text{ MPa} \le 12$$

5. Bolts (N = 6 on D_1 = 114)

$$197\,845 = \frac{\pi}{4} d_1^2 (55)(6)\frac{114}{2} \;\Rightarrow\; d_1 = 3.66 \text{ mm}$$

Use M8 bolts: M6 is the smallest size that passes on strength, and M8 is adopted for robustness.

Check: $\tau = \dfrac{8T}{\pi d_1^2 N D_1} = 11.5$ MPa; crushing $\sigma_c = \dfrac{2T}{N d_1 t D_1} = \dfrac{2(197\,845)}{6(8)(19)(114)} = 3.8$ MPa ≤ 110.

Answer. d = 38, D = 76, L = 57, D_1 = 114, D_2 = 152, t = 19, t_1 = 10 mm; two keys 10 × 8 × 57 per half; 6 × M8 bolts. τ_{shaft} = 18.4, τ_{hub} = 2.45, τ_{flange} = 1.15, τ_{bolt} = 11.5 MPa.

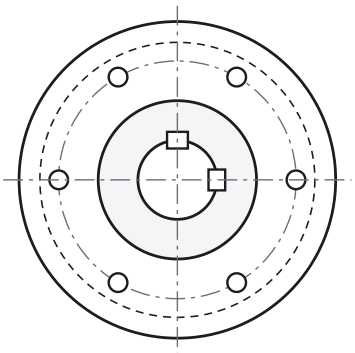

6 bolts on Ø114 PCD, keys at 90°

Fig. 9.1b End view: 6 bolts, two keys at 90°

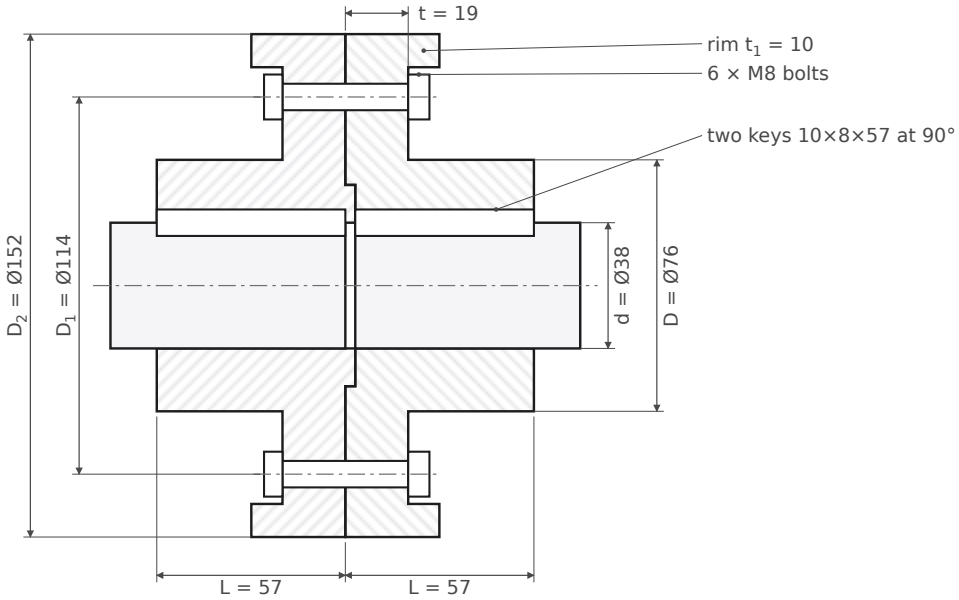

Fig. 9.1a Protected flange coupling, sectional elevation (mm)

Exam tip Two keys at 90° each take half the torque. Writing $T/2$ in the key equations is the step examiners look for. Key length is still taken as the hub length.

Q 9.2 ME-313 May 2019 Q7 · ME-313 (2nd paper) Q7 · CME-403 Nov 2024 Q7 — 14 / 14 / 8 marks

Design and draw a cast iron protected type flange coupling to connect two shafts of 36 mm diameter transmitting 15 kW at 720 rpm. The overload capacity is 1.25 times average torque. The bolts and keys are made of C20 steel and the flange is made of FG200.

Variant (CME-403 Nov 2024 Q7): shafts of steel 40C8 (S_{yt} = 380, FOS = 2.5); bolts and keys of 30C8 (S_{yt} = 400 N/mm², FOS = 2.5); flange FG200 (S_{ut} = 200 N/mm², FOS = 6) (solved at the end).

SOLUTION

Assumed C20: $S_{yt} = 240$ MPa, FOS = 3, $S_{sy} = 0.5 S_{yt}$, giving τ = 120/3 = 40 MPa and σ_c = 240/3 = 80 MPa for the bolts and keys. FG200: $S_{ut} = 200$ MPa, shear strength taken as $0.5 S_{ut}$ with FOS = 6, giving τ = 16.7 MPa. Key 10 × 8 for a 36 mm shaft. N = 4 bolts.

1. Design torque

$$T_{mean} = \frac{60 \times 10^6 (15)}{2\pi (720)} = 198\,944 \text{ N·mm}, \qquad T = 1.25\, T_{mean} = 248\,680 \text{ N·mm}$$

Shaft stress: $\tau = 16(248\,680)/[\pi (36)^3] = 27.1$ MPa, acceptable for any plain carbon shaft steel.

2. Proportions

$D = 72$, $L = 54$, $D_1 = 108$, $D_2 = 144$, $t = 18$, $t_1 = 9$ mm.

Hub: $\tau = \dfrac{16(248\,680)(72)}{\pi (72^4 - 36^4)} = 3.62$ MPa ≤ 16.7.

3. Key 10 × 8

Shear: $l = \dfrac{2T}{\tau b d} = \dfrac{2(248\,680)}{40(10)(36)} = 34.5$ mm. Crushing: $l = \dfrac{4T}{\sigma_c h d} = \dfrac{4(248\,680)}{80(8)(36)} = 43.2$ mm. Take $l = L = 54$ mm: $\tau = 25.6$, $\sigma_c = 64.0$ MPa, both within the limits.

4. Flange at the hub

$\tau = \dfrac{2(248\,680)}{\pi (72)^2 (18)} = 1.70$ MPa ≤ 16.7.

5. Bolts

$$248\,680 = \frac{\pi}{4} d_1^2 (40)(4) \frac{108}{2} \;\Rightarrow\; d_1 = 6.05 \text{ mm} \;\rightarrow\; \text{M8}$$

Check M8: $\tau = 22.9$ MPa ≤ 40; crushing $\sigma_c = \dfrac{2(248\,680)}{4(8)(18)(108)} = 8.0$ MPa ≤ 80.

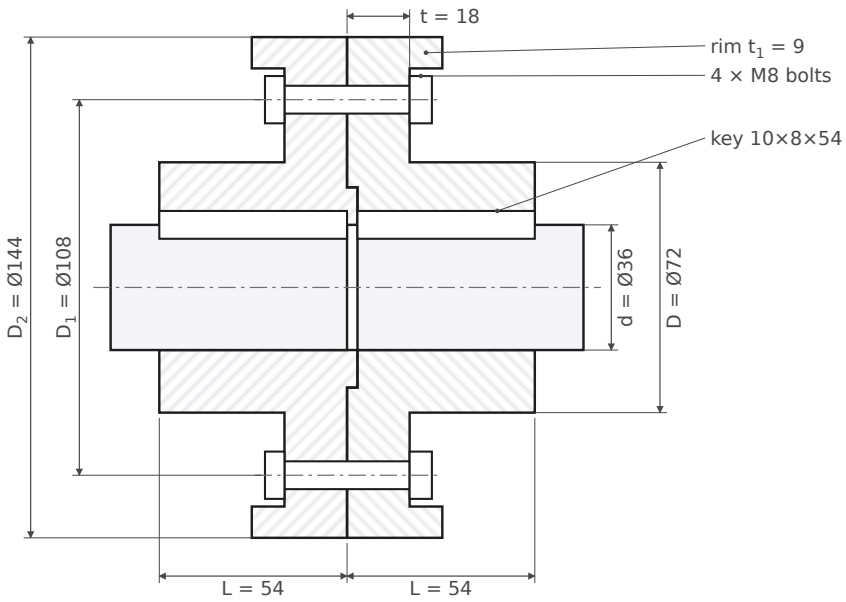

Fig. 9.2 Cast iron protected flange coupling for 36 mm shafts, sectional elevation (mm). The spigot and recess locate the two halves.

Answer. d = 36, D = 72, L = 54, D_1 = 108, D_2 = 144, t = 18, t_1 = 9 mm; key 10 × 8 × 54; 4 × M8 bolts. Design torque 248.7 N·m.

Variant (CME-403): given FOS values

Bolts and keys (30C8): τ = 0.5(400)/2.5 = 80 MPa, σ_c = 400/2.5 = 160 MPa. Flange FG200: τ = 0.5(200)/6 = 16.7 MPa. Shaft 40C8: τ = 0.5(380)/2.5 = 76 MPa against the actual 27.1 MPa, so the 36 mm shaft is safe. Dimensions D, L, D_1, D_2, t, t_1 and the hub and flange checks are unchanged.

Item	Main (C20, FOS 3)	Variant (30C8, FOS 2.5)
Bolt/key τ, σ_c (MPa)	40, 80	80, 160
Key length needed (shear / crushing)	34.5 / 43.2 mm	17.3 / 21.6 mm
Key adopted	10 × 8 × 54	10 × 8 × 54
Bolt d_1 required	6.05 mm, so M8	4.28 mm, so M6 (τ = 40.7 MPa); M8 if kept uniform
Shaft check	27.1 MPa	27.1 MPa vs 76 MPa allowed

Bush-pin flexible coupling

Q 9.3 ME304 End-sem May 2023 Q6 — 8 marks

Design a bush-pin type flexible coupling for transmission of 30 kW from a motor to a centrifugal pump at 1448 rpm. Diameter of motor shaft = 38 mm, diameter of pump shaft = 30 mm, no. of bolts = 6. Allowable shear stress for the bolts, keys and shaft = 55 MPa; allowable shear stress for the flanges = 12 MPa. Assume crushing stress twice the shearing stress in all cases.

SOLUTION

Assumed Bhandari's bush-pin proportions: hub $D = 2d$, $L = 1.5d$; pin $d_1 = 0.5d/\sqrt{N}$; pin enlarged to $d_2 = d_1 + 4$ mm inside the bush; brass sleeve 2 mm and rubber bush 6 mm thick, so $D_b = d_2 + 16$; PCD $D_1 = D + D_b + 2(6)$; permissible pressure on rubber $p = 1$ MPa; gap between flanges 5 mm. σ_c = 110 MPa; the pin is checked for max shear stress ≤ 55 MPa. Keys: 10 × 8 (38 mm), 8 × 7 (30 mm).

1. Torque and shafts

$T = \dfrac{60 \times 10^6 (30)}{2\pi(1448)} = 197\,845$ N·mm. Shaft stresses: motor $\dfrac{16T}{\pi 38^3} = 18.4$ MPa, pump $\dfrac{16T}{\pi 30^3} = 37.3$ MPa, both ≤ 55.

2. Hubs and keys (each half designed separately)

	Motor half (d = 38)	Pump half (d = 30)
Hub D = 2d, L = 1.5d	76, 57	60, 45
Hub τ = 16TD/π(D⁴−d⁴)	2.45 MPa	4.98 MPa
Key b × h × l (l = L)	10 × 8 × 57	8 × 7 × 45
Key τ = 2T/(bld)	18.3 MPa	36.6 MPa
Key σ_c = 4T/(hld)	45.7 MPa	83.7 MPa

All within 12 MPa (hubs) and 55/110 MPa (keys). The pump key needs at least $l = 4T/(\sigma_c h d) = 34.3$ mm, and 45 mm is provided.

3. Pins and rubber bushes (N = 6, based on the larger shaft d = 38)

$d_1 = \dfrac{0.5(38)}{\sqrt{6}} = 7.76 \to 8$ mm. Trial: $d_2 = 12$, $D_b = 28$, $D_1 = 76 + 28 + 12 = 116$ mm, $W = \dfrac{2T}{ND_1} = 568.5$ N, $l_b = \dfrac{W}{pD_b} = 20.3$ mm. Pin bending: $\sigma_b = \dfrac{32(568.5)(10+5)}{\pi 8^3} = 170$ MPa, which is too high ($\tau_{max} = 86$ MPa).

Increase to $d_1 = 10$ mm: $d_2 = 14$, $D_b = 14 + 2(2) + 2(6) = 30$ mm, $D_1 = 76 + 30 + 12 = 118$ mm.

$$W = \frac{2T}{ND_1} = \frac{2(197\,845)}{6(118)} = 558.9\ \text{N}, \qquad l_b = \frac{W}{pD_b} = \frac{558.9}{1(30)} = 18.6 \to 20\ \text{mm}\ (l_b/D_b = 0.67)$$

Pin: $\tau = \dfrac{4(558.9)}{\pi(10)^2} = 7.1$ MPa; $M = W\left(\dfrac{l_b}{2} + 5\right) = 558.9(15) = 8383$ N·mm; $\sigma_b = \dfrac{32(8383)}{\pi(10)^3} = 85.4$ MPa;

$$\tau_{max} = \sqrt{\left(\tfrac{85.4}{2}\right)^2 + 7.1^2} = 43.3\ \text{MPa} \le 55\ \checkmark$$

Actual bush pressure $= 558.9/(30 \times 20) = 0.93$ MPa ≤ 1.

4. Flanges

Pin flange (motor) $t = 0.5(38) = 19$ mm; bush flange (pump) $t = 20$ mm ($\ge l_b$). Outer diameter $D_2 = D_1 + D_b + 2t = 118 + 30 + 38 = 186$ mm.

Flange shear at the weaker (pump) hub: $\tau = \dfrac{2(197\,845)}{\pi(60)^2(20)} = 1.75$ MPa ≤ 12.

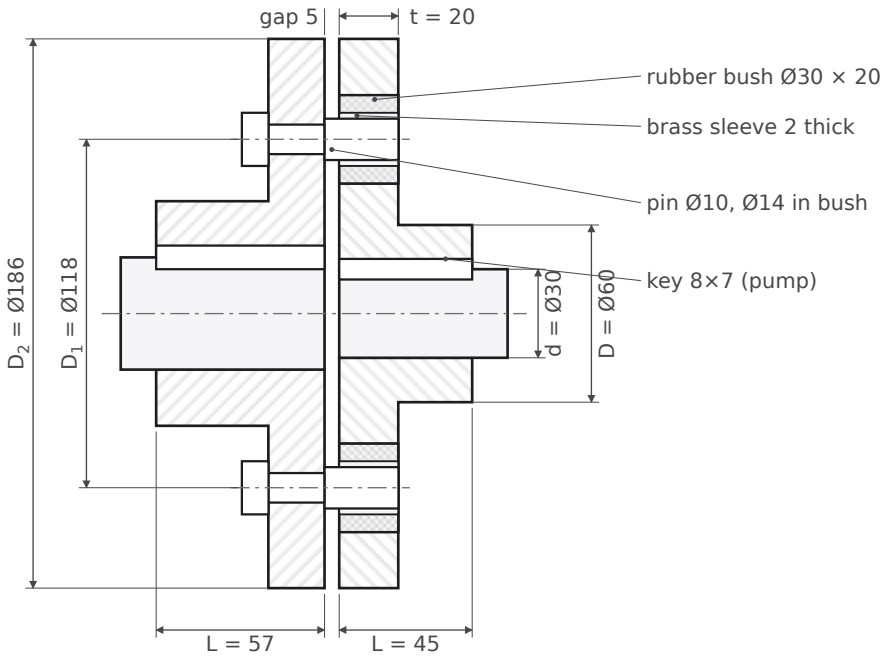

Fig. 9.3 Bush-pin coupling, motor half (left: d = 38, D = 76) and pump half (right: d = 30, D = 60), mm

Answer. Motor hub Ø76 × 57 (key 10 × 8 × 57); pump hub Ø60 × 45 (key 8 × 7 × 45); 6 pins Ø10 (Ø14 in the bush) on D_1 = 118; rubber bushes Ø30 × 20 with 2 mm brass sleeve; flanges t = 19 / 20, D_2 = 186 mm; gap 5 mm.

Exam tip The proportion $d_1 = 0.5d/\sqrt{N}$ is only a starting value. The pin is a cantilever loaded through the rubber, and bending usually forces a larger pin, so always show the bending check.

Q 9.4 AE-311 Jul 2021 Q6 — 14 marks

Design a bushed pin type flexible coupling to connect a pump shaft to a motor shaft transmitting 32 kW at 960 rpm. The overall torque is 20% more than the mean torque. Draw the neat sketch of the

coupling.

SOLUTION

Assumed Shaft, key and pin of plain carbon steel (40C8 class) with τ = 40 MPa and σ_c = 80 MPa (FOS ≈ 4.75 on $S_{sy} = 0.5 \times 380$). Flange FG200: τ = 15 MPa. Rubber $p = 1$ MPa. Bush-pin proportions as in Q 9.3.

1. Torque and shaft diameter

$$T_{mean} = \frac{60 \times 10^6 (32)}{2\pi (960)} = 318\,310 \text{ N·mm}, \qquad T = 1.2\, T_{mean} = 381\,972 \text{ N·mm}$$

$$d = \left(\frac{16 (381\,972)}{\pi (40)} \right)^{1/3} = 36.5 \text{ mm}$$

38 mm with its 10 × 8 key over $L = 57$ gives key crushing $4T/(hLd) = 88.2$ MPa > 80. Take $d = 40$ mm (τ = 30.4 MPa).

2. Hub and key

$D = 80$, $L = 60$ mm. Hub τ = $\dfrac{16(381\,972)(80)}{\pi(80^4 - 40^4)} = 4.05$ MPa ≤ 15.

Key 12 × 8 × 60: $\tau = \dfrac{2(381\,972)}{12(60)(40)} = 26.5$ MPa, $\sigma_c = \dfrac{4(381\,972)}{8(60)(40)} = 79.6$ MPa ≤ 80.

3. Number of pins, pin and bush

$N \approx d/25 + 3 = 4.6$, so take $N = 6$ (even number). Proportion: $d_1 = 0.5(40)/\sqrt{6} = 8.2$ mm. Bending through the rubber needs more: with $W \approx 1000$ N and arm ≈ 20 mm, $d_1 \ge [32(1000)(20)/(\pi\, 80)]^{1/3} = 13.7$ mm. **Take $d_1 = 16$ mm**, $d_2 = 20$ mm, $D_b = 20 + 4 + 12 = 36$ mm.

$$D_1 = D + D_b + 2(6) = 80 + 36 + 12 = 128 \text{ mm}, \qquad W = \frac{2T}{N D_1} = \frac{2(381\,972)}{6(128)} = 994.7 \text{ N}$$

$l_b = W/(pD_b) = 994.7/36 = 27.6 \to 30$ mm ($l_b/D_b = 0.83$; actual $p = 0.92$ MPa).

Pin: $\tau = \dfrac{4(994.7)}{\pi(16)^2} = 4.95$ MPa; $M = 994.7(15 + 5) = 19\,894$ N·mm; $\sigma_b = \dfrac{32(19\,894)}{\pi(16)^3} = 49.5$ MPa; $\tau_{max} = \sqrt{24.7^2 + 4.95^2} = 25.2$ MPa ≤ 40.

4. Flanges

Pin flange $t = 0.5d = 20$ mm; bush flange $t = 30$ mm ($= l_b$); $D_2 = D_1 + D_b + 2(20) = 204$ mm. Flange shear at hub: $\tau = \dfrac{2(381\,972)}{\pi(80)^2(20)} = 1.90$ MPa ≤ 15.

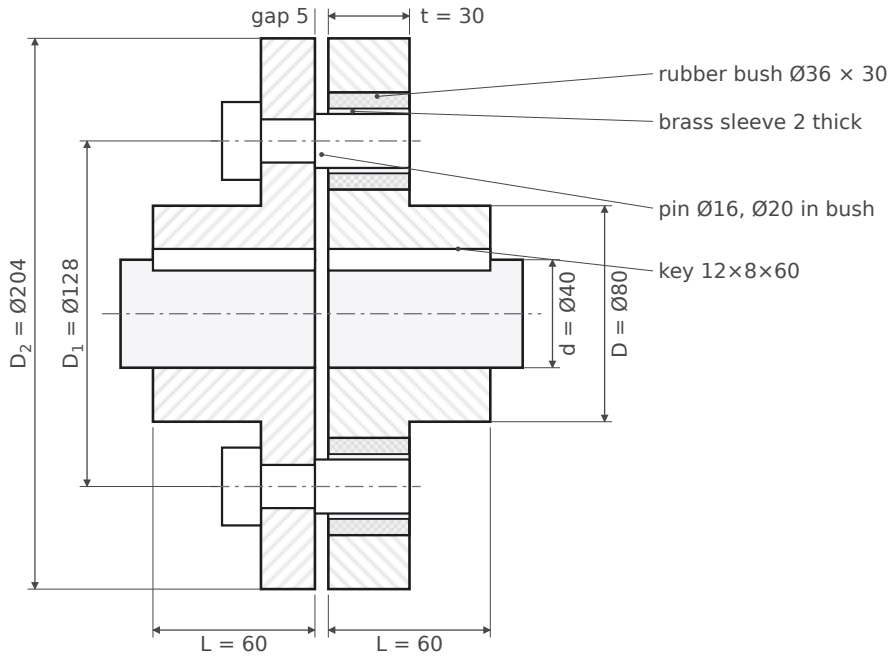

Fig. 9.4 Bushed-pin flexible coupling for 32 kW at 960 rpm, sectional elevation (mm)

Answer. d = 40 mm; hubs Ø80 × 60; key 12 × 8 × 60; 6 pins Ø16 (Ø20 in bush) on D_1 = 128; rubber bushes Ø36 × 30 with 2 mm brass sleeves; flanges t = 20 (pin side) and 30 (bush side), D_2 = 204 mm; gap 5 mm.

Q 9.5 AE302 May 2023 Q3 — 8 marks

Design a bushed-pin type flexible coupling for connecting two shafts 75 mm in diameter running at 1500 rpm while transmitting 25 kW.

SOLUTION

Assumed Materials as in Q 9.4: τ = 40 MPa and σ_c = 80 MPa for the shaft, key and pins; flange τ = 15 MPa; rubber $p = 1$ MPa. Same bush-pin proportions.

1. Torque and shaft check

$$T = \frac{60 \times 10^6 (25)}{2\pi(1500)} = 159\,155 \text{ N·mm}, \qquad \tau_{shaft} = \frac{16(159\,155)}{\pi(75)^3} = 1.92 \text{ MPa}$$

The 75 mm shaft is lightly stressed, so the coupling is proportioned from d and every stress check will be low.

2. Hub and key

$D = 2d = 150$, $L = 1.5d = 112.5$ mm. Key 20 × 12 × 112.5 (IS 2292, 65–75 mm shafts): $\tau = 1.9$ MPa, $\sigma_c = 6.3$ MPa. Hub τ = 0.26 MPa.

3. Pins and bushes

$N = d/25 + 3 = 6$. $d_1 = \dfrac{0.5(75)}{\sqrt{6}} = 15.3 \to 16$ mm; $d_2 = 20$, $D_b = 36$ mm; $D_1 = 150 + 36 + 12 = 198$ mm.

$W = \dfrac{2(159\,155)}{6(198)} = 267.9$ N. Pressure alone needs $l_b = 267.9/36 = 7.4$ mm, which is too short to hold the bush; take $l_b = D_b = 36$ mm (actual $p = 0.21$ MPa).

Pin: $\tau = 1.33$ MPa; $\sigma_b = \dfrac{32(267.9)(18+5)}{\pi(16)^3} = 15.3$ MPa; $\tau_{max} = 7.8$ MPa. Safe.

4. Flanges

$t = 0.5d = 37.5 \to 38$ mm for both flanges ($\geq l_b$); $D_2 = 198 + 36 + 2(37.5) = 309 \to 310$ mm. Flange shear at the hub: $\tau = 2T/(\pi D^2 t) = 0.12$ MPa.

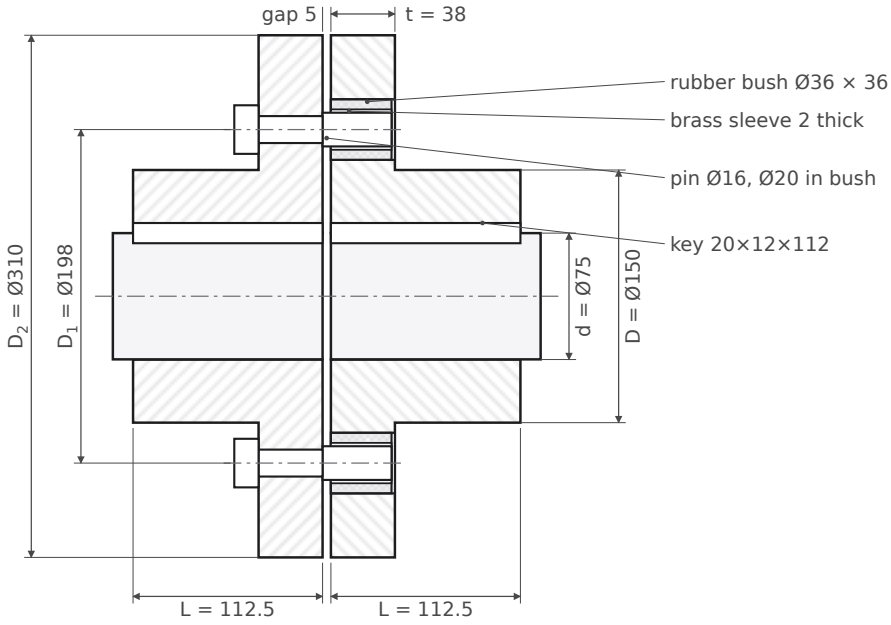

Fig. 9.5 Bushed-pin coupling for 75 mm shafts (mm)

Answer. Hubs Ø150 × 112.5; key 20 × 12 × 112.5; 6 pins Ø16 (Ø20 in bush) on D_1 = 198; rubber bushes Ø36 × 36; flanges t = 38, D_2 = 310 mm; gap 5 mm. All stresses are far below the limits (shaft 1.9 MPa).

Exam tip 25 kW on a 75 mm shaft is very light. If the paper actually meant 250 kW, then T = 1592 N·m and τ_{shaft} = 19.2 MPa; the same procedure applies with W ten times larger, and the pin bending check then decides d_1.

10 Gears

Spur and helical gear design by the Lewis and Buckingham equations (Bhandari Ch. 17–18). A gear question turns up in almost every paper (9 questions in 10 sittings), usually as an 8-mark "design the pair" problem.

KEY FORMULAS

- Torque and tangential load: $M_t = \dfrac{60 \times 10^6\,(\text{kW})}{2\pi n}$ N·mm, $P_t = \dfrac{2M_t}{d_p} = \dfrac{P}{v}$, $v = \dfrac{\pi d_p n}{60\,000}$ m/s; $P_r = P_t \tan\phi$
- Lewis beam strength: $S_b = m\,b\,\sigma_b\,Y$, $Y = 0.484 - \dfrac{2.87}{z}$ (20° full depth); $b = 10m$ (range $9.5m$–$12.5m$); the weaker member is the one with the smaller $\sigma_b Y$; for steel, $\sigma_b = S_{ut}/3$
- Velocity factor (Barth): $C_v = \dfrac{3}{3+v}$ (ordinary cut or cast teeth, $v < 10$), $\dfrac{6}{6+v}$ (accurately hobbed, $v < 20$), $\dfrac{5.6}{5.6+\sqrt{v}}$ (precision, $v > 20$); $P_{eff} = \dfrac{C_s P_t}{C_v}$, and $S_b = f_s\,P_{eff}$
- Buckingham dynamic load: $P_d = \dfrac{21v\,(bC + P_t)}{21v + \sqrt{bC + P_t}}$ with b in mm and C in N/mm (deformation factor × error, e.g. $11\,400\,e$ for steel–steel 20° FD); $P_{eff} = C_s P_t + P_d$
- Wear strength: $S_w = b\,Q\,d_p\,K$, $Q = \dfrac{2z_g}{z_g + z_p}$, $K = 0.16\left(\dfrac{BHN}{100}\right)^2$ (steel pair) or $K = \dfrac{\sigma_{es}^2 \sin\phi\cos\phi}{1.4}\left(\dfrac{1}{E_p} + \dfrac{1}{E_g}\right)$
- Helical: $z' = \dfrac{z}{\cos^3\psi}$ (use in Y), $d = \dfrac{m_n z}{\cos\psi}$, $P_r = \dfrac{P_t \tan\phi_n}{\cos\psi}$, $P_a = P_t \tan\psi$, $S_w = \dfrac{b\,Q\,d_p\,K}{\cos^2\psi}$, $b \geq \dfrac{1.15\,\pi m_n}{\sin\psi}$
- Tooth proportions (20° FD): addendum m, dedendum $1.25m$, clearance $0.25m$, tooth thickness $1.5708m$, fillet radius $0.4m$; $z_{min} = 18$ to avoid interference

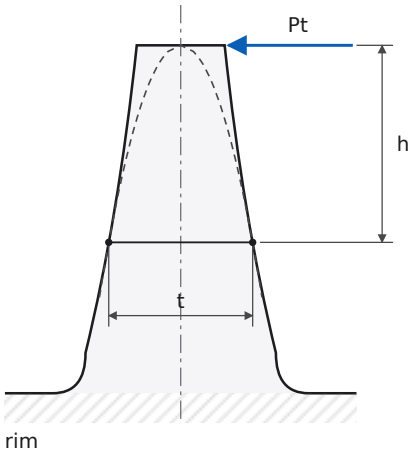

Tooth as a cantilever of width b, loaded by Pt at the tip.

Dashed: parabola of uniform strength through the load point. It touches the flanks at the critical (weakest) section, width t.

σb = 6 Pt h / (b t²)
⇒ Pt = σb b m Y,
Y = t² / (6 h m) (Lewis form factor)

Radial component Pr neglected.

Fig. 10.0 Lewis model: the tooth as a cantilever, with the parabola of uniform strength fixing the critical section

Spur gears: strength, dynamic load and wear

Q 10.1 ME304 End-sem May 2024 Q7 — 8 marks

A pair of spur gears is to transmit 25 kW. The teeth are 20° full depth involute profile. The cast steel pinion (σ_d = 100 MPa) is to drive a cast iron gear (σ_d = 55 MPa) at 150 rpm and the velocity ratio is

1:6. If the pinion is surface hardened to 250 BHN, determine the proper module, number of teeth and face width for these gears from the standpoint of strength, dynamic load and wear. Assume a first class commercial gear having an error of 0.07 mm for which C = 283 kN/m. The wear factor K_w is 1.4 and endurance strength in bending is 1.5×BHN for the pinion material.

SOLUTION

Assumed The gear runs at 150 rpm, so the pinion runs at $6 \times 150 = 900$ rpm. σ_d are allowable stresses, so no separate service factor or FOS is applied in the Lewis step ($C_s = 1$). $b = 10m$. Ordinary cut teeth, $C_v = 3/(3+v)$.

1. Teeth and the weaker member

Take $z_p = 18$ (minimum for 20° FD), so $z_g = 6 \times 18 = 108$.

$$Y_p = 0.484 - \frac{2.87}{18} = 0.3246, \quad Y_g = 0.484 - \frac{2.87}{108} = 0.4574$$

$$\sigma_d Y: \quad \text{pinion } 100(0.3246) = 32.46, \qquad \text{gear } 55(0.4574) = 25.16\ \text{N/mm}^2$$

The CI gear is weaker; design it.

2. Module from Lewis with velocity factor

$v = \dfrac{\pi(18m)(900)}{60\,000} = 0.8482m$ m/s, $P_t = \dfrac{25\,000}{0.8482m} = \dfrac{29\,473}{m}$ N, and $S_b = m(10m)(55)(0.4574) = 251.6\,m^2$.

$$251.6\,m^2 = \frac{29\,473}{m} \cdot \frac{3 + 0.8482m}{3} \;\Rightarrow\; m = 7.05\ \text{mm (trial)} \;\rightarrow\; m = 8\ \text{mm}$$

m (mm)	v (m/s)	P_t (N)	C_v	P_t/C_v (N)	S_b gear (N)	
6	5.089	4912	0.3709	13 246	9057	fails
8	6.786	3684	0.3066	12 017	16 101	OK

So $m = 8$ mm, $b = 80$ mm, $d_p = 144$ mm, $d_g = 864$ mm, $a = 504$ mm.

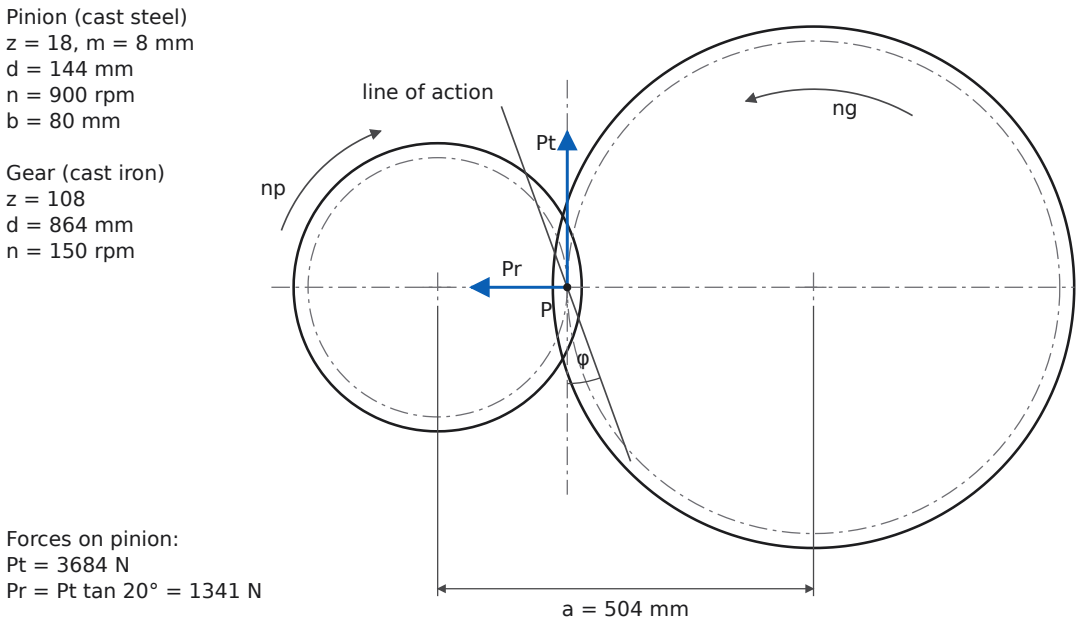

Fig. 10.1 The designed pair; forces shown are those exerted on the pinion at the pitch point (schematic, gear not to scale)

3. Dynamic load (Buckingham)

What C means here. 283 kN/m = 283 N/mm, which has the units of load per unit face width. That is the product (deformation factor × error) that Khurmi tabulates against the error, here for $e = 0.07$

mm. So bC is already a force and goes straight into Buckingham's equation. Multiplying by e again would give $Ce = 283 \times 0.07 \approx 20$ N/mm, about 40 times smaller than Bhandari's $11\,400e \approx 800$ N/mm for steel gears, which is absurd.

$$bC + P_t = 80(283) + 3684 = 26\,324 \text{ N}, \qquad 21v = 21(6.786) = 142.5$$

$$P_d = \frac{142.5(26\,324)}{142.5 + \sqrt{26\,324}} = \frac{142.5(26\,324)}{142.5 + 162.2} = 12\,309 \text{ N}$$

$$P_{eff} = C_s P_t + P_d = 3684 + 12\,309 = 15\,993 \text{ N}$$

4. Endurance (bending) check

Pinion: $\sigma_e = 1.5(250) = 375$ N/mm², $S_e = mb\sigma_e Y_p = 8(80)(375)(0.3246) = 77\,893$ N, well above $15\,993$ N.

Assumed The paper gives σ_e only for the pinion. For the grey CI gear take the data-book flexural endurance $\sigma_e \approx 90$ N/mm².

Gear: $S_e = 8(80)(90)(0.4574) = 26\,348 \text{ N} > 15\,993$ N. Even with its static $\sigma_d = 55$, $S_b = 16\,101$ N just exceeds P_{eff}. Safe.

5. Wear

Assumed Surface endurance $\sigma_{es} = 2.8(BHN) - 70 = 2.8(250) - 70 = 630$ N/mm². $E_p = 200$ GPa (cast steel), $E_g = 100$ GPa (CI). The given $K_w = 1.4$ is the 1.4 in the load–stress factor.

$$K = \frac{630^2 \sin 20^\circ \cos 20^\circ}{1.4}\left(\frac{1}{200\,000} + \frac{1}{100\,000}\right) = 1.367 \text{ N/mm}^2, \qquad Q = \frac{2(108)}{108 + 18} = 1.714$$

$$S_w = bQd_pK = 80(1.714)(144)(1.367) = 26\,991 \text{ N} > P_{eff} = 15\,993 \text{ N} \quad (\text{FOS } 1.69)$$

Answer. m = 8 mm; z_p = 18, z_g = 108; b = 80 mm; d_p = 144 mm, d_g = 864 mm, a = 504 mm. P_d = 12.3 kN, P_{eff} = 16.0 kN; S_e (gear) = 26.3 kN, S_w = 27.0 kN, so the pair is safe in bending, dynamic load and wear.

Exam tip "1:6" with the gear at 150 rpm puts the pinion at 900 rpm. Using 150 rpm for the pinion gives a module three times too large.

Q 10.2 ME304 End-sem May 2023 Q5 · ME262 May/June 2019 Q7 — 8 marks

A motor shaft rotating at 1440 rpm has to transmit 25 hp to a low speed shaft with a speed reduction of 3:1. The teeth of spur gears are 20° full depth involutes, with 18 teeth on pinion. Both pinion and gear are made of same material with permissible bending stress of 138 MPa. Design the gears from stand point of strength, dynamic load and wear. Assume a velocity factor C_v = 3/(3 + v), v = pitch line velocity in m/s. Determine the module, face width and pitch diameter of gears. The surface endurance of the material is σ_{es} = 600 MPa; modulus of elasticity of pinion and gear = 200 GPa. Assume a first class commercial gear having an error of 0.07 mm for which C = 283 kN/m. The wear factor K_w is 1.4 and endurance strength in bending is 1.75×BHN for the pinion. Hardness of the pinion is 180 BHN. Select a service factor of 1.5 for the operation of the gear drive.

Variant (ME262 May/June 2019 Q7): same drive, but σ_{es}, E, hardness and service factor are to be taken from the data book. With the values used below, the design is the same.

SOLUTION

Assumed 1 hp = 745.7 W, so $P = 25(745.7) = 18\,643$ W. $z_g = 3(18) = 54$. $b = 10m$. $C = 283$ N/mm already includes the error (see Q 10.1).

1. Preliminary module (Lewis, C_v)

Same material for both, so the pinion (smaller Y) is weaker: $Y_p = 0.484 - 2.87/18 = 0.3246$.

$v = \dfrac{\pi(18m)(1440)}{60\,000} = 1.357m$, $C_s P_t = \dfrac{1.5(18\,643)}{1.357m} = \dfrac{20\,604}{m}$, and $S_b = m(10m)(138)(0.3246) = 447.9\,m^2$.

$$447.9\,m^2 = \frac{20\,604}{m} \cdot \frac{3 + 1.357m}{3} \;\Rightarrow\; m = 5.41 \text{ mm} \;\rightarrow\; \text{try } m = 6 \text{ mm}$$

2. Dynamic load, endurance and wear for trial modules

Endurance strength: $\sigma_e = 1.75(180) = 315$ N/mm², $S_e = mb(315)Y_p$. Load–stress factor and ratio factor:

$$K = \frac{600^2 \sin 20^\circ \cos 20^\circ}{1.4}\left(\frac{2}{200\,000}\right) = 0.8264 \text{ N/mm}^2, \qquad Q = \frac{2(54)}{54+18} = 1.5$$

For $m = 10$: $d_p = 180$ mm, $v = 13.57$ m/s, $P_t = 18\,643/13.57 = 1374$ N, $bC + P_t = 100(283) + 1374 = 29\,674$ N.

$$P_d = \frac{21(13.57)(29\,674)}{21(13.57) + \sqrt{29\,674}} = 18\,495 \text{ N}, \qquad P_{eff} = 1.5(1374) + 18\,495 = 20\,555 \text{ N}$$

m, b (mm)	v (m/s)	P_t (N)	P_d (N)	P_{eff} (N)	S_e (N)	S_w (N)	Result
6, 60	8.14	2289	10 636	14 070	36 805	8033	wear fails
8, 80	10.86	1717	14 460	17 035	65 430	14 281	wear fails
10, 100	13.57	1374	18 495	20 555	102 235	22 314	OK

With $m = 8$, wear would need $b = 131$ mm $= 16.4m$, beyond $12.5m$. So the design is **wear-limited**: $m = 10$ mm, $b = 100$ mm. Check: $S_w/P_{eff} = 22\,314/20\,555 = 1.09$, $S_e/P_{eff} = 4.97$.

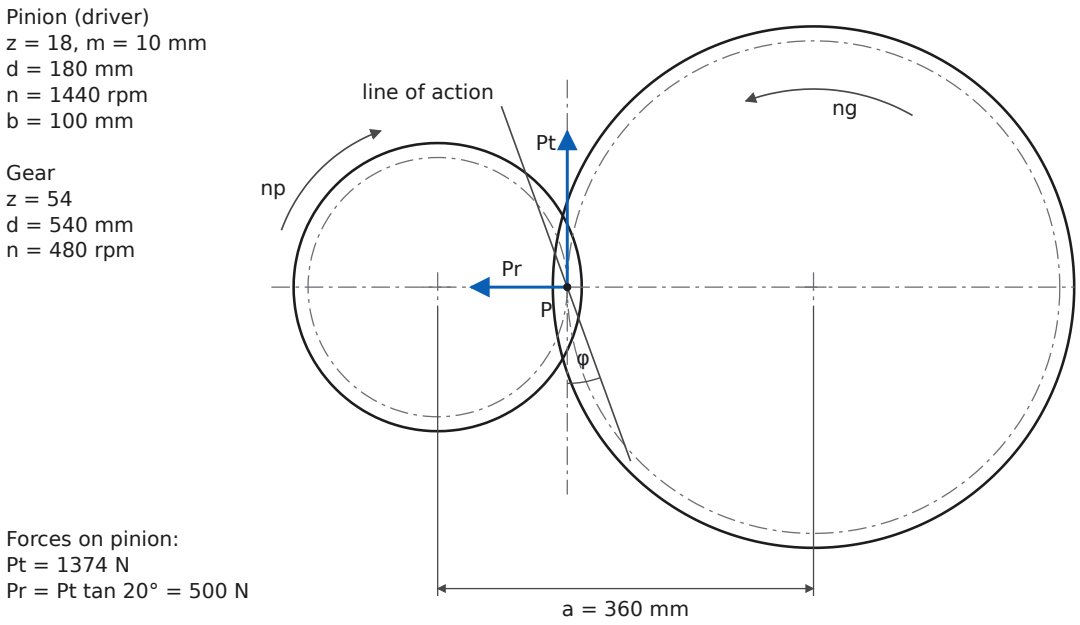

Fig. 10.2 Designed pair for Q 10.2 (schematic)

Answer. m = 10 mm, b = 100 mm; z_p = 18, z_g = 54; d_p = 180 mm, d_g = 540 mm, a = 360 mm. P_{eff} = 20.6 kN against S_w = 22.3 kN (wear governs) and S_e = 102 kN.

Exam tip Strength alone gives m = 6. Examiners want you to see that the soft (180 BHN) pinion fails in pitting first, and to keep raising the module until $S_w \geq P_{eff}$. Don't stop at the Lewis step.

Spur gears: Lewis design with velocity factor, then wear

Q 10.3 AE-311 Jul 2021 Q1(b) 8 marks

A pair of spur gears of 20° pressure angle consists of a 24 teeth pinion meshing with a 49 teeth gear. Module = 3 mm; face width = 40 mm; ultimate tensile stress for gear material = 600 MPa and surface hardness = 500 BHN. Pinion rotation = 1450 rpm, service factor = 1.75, FOS = 1.5. Determine the rated power that the gears can transmit.

SOLUTION

Assumed Both gears steel (same material), 20° full depth. $\sigma_b = S_{ut}/3 = 200$ N/mm². Ordinary cut teeth, $C_v = 3/(3+v)$ (Bhandari's practice for $v < 10$ m/s).

1. Beam strength (pinion is weaker, same material)

$$Y_p = 0.484 - \frac{2.87}{24} = 0.3644, \qquad S_b = mb\sigma_b Y = 3(40)(200)(0.3644) = 8746 \text{ N}$$

2. Wear strength

$d_p = 3(24) = 72$ mm, $Q = \dfrac{2(49)}{49+24} = 1.3425$, $K = 0.16(500/100)^2 = 4.0$ N/mm².

$$S_w = bQd_pK = 40(1.3425)(72)(4.0) = 15\,465 \text{ N}$$

$S_b < S_w$, so bending governs.

3. Rated load and power

$v = \dfrac{\pi(72)(1450)}{60\,000} = 5.466$ m/s, $C_v = \dfrac{3}{3+5.466} = 0.3543$.

$$S_b = f_s\frac{C_sP_t}{C_v} \;\Rightarrow\; P_t = \frac{S_bC_v}{C_sf_s} = \frac{8746(0.3543)}{1.75(1.5)} = 1180.6 \text{ N}$$

$$\text{Power} = P_tv = 1180.6(5.466) = 6453 \text{ W} = 6.45 \text{ kW}$$

> **Answer.** S_b = 8.75 kN (governs), S_w = 15.5 kN; rated P_t = 1181 N; rated power ≈ 6.45 kW. (If the gears are accurately hobbed, $C_v = 6/(6+v) = 0.5233$ and the rating rises to 9.53 kW.)

Q 10.4 ME-313 May 2019 Q6 14 marks

In a spur gear drive, the pinion of 76 mm pitch circle diameter drives a gear, consists of 20° involute teeth and transmits 25 kW power. The gear rotates at 300 rpm at speed reduction 5:1. The pinion is made of forged C-30 steel with a hardness 250 BHN and drives a cast iron gear. Determine module, number of teeth, pitch circle diameter and face width of the gears. Also check the design for wear.

SOLUTION

Assumed Pinion speed $= 5(300) = 1500$ rpm. C-30 steel: $S_{ut} = 500$ N/mm², $\sigma_b = 500/3 = 166.7$ N/mm². Grey CI gear FG200: $\sigma_b = 200/3 = 66.7$ N/mm², about 200 BHN. No service factor or FOS is given, and d_p is fixed, so take $C_s = 1$ and let $\sigma_b = S_{ut}/3$ carry the margin.

1. Module and number of teeth

$d_p = mz_p = 76$ mm. With standard modules, $m = 4$ gives $z_p = 19$ and $m = 2$ gives $z_p = 38$; 2.5, 3 and 5 don't divide 76. Choose $m = 4$ mm, $z_p = 19$ (≥ 18, no interference), $z_g = 5(19) = 95$, $d_g = 380$ mm.

2. Loads and the weaker member

$$v = \frac{\pi(76)(1500)}{60\,000} = 5.969 \text{ m/s}, \qquad P_t = \frac{25\,000}{5.969} = 4188 \text{ N} \ \ (M_t = 159.2 \text{ N·m})$$

$Y_p = 0.484 - 2.87/19 = 0.3329$, $Y_g = 0.484 - 2.87/95 = 0.4538$.

$\sigma_b Y$: pinion $166.7(0.3329) = 55.5$; gear $66.7(0.4538) = 30.25$ N/mm². The CI gear is weaker.

3. Face width

Ordinary cut ($C_v = 3/(3 + 5.969) = 0.3345$): $b = \dfrac{P_t/C_v}{m\sigma_b Y} = \dfrac{4188/0.3345}{4(30.25)} = 103.5$ mm $= 25.9m$ ($b/d_p = 1.36$).

Too wide.

So specify **accurately hobbed** gears, $C_v = \dfrac{6}{6 + 5.969} = 0.5013$:

$$P_{eff} = \frac{C_s P_t}{C_v} = \frac{4188}{0.5013} = 8355 \text{ N}, \qquad b = \frac{8355}{4(30.25)} = 69.0 \text{ mm} \ \rightarrow \ b = 70 \text{ mm}$$

$b = 17.5m$ is above the usual $12.5m$, but d_p is fixed by the question and $b/d_p = 0.92 < 1$, which is acceptable for a pinion.

Check: S_b (gear) $= 4(70)(66.7)(0.4538) = 8471 \text{ N} \geq 8355$ N; S_b (pinion) $= 15\,538$ N.

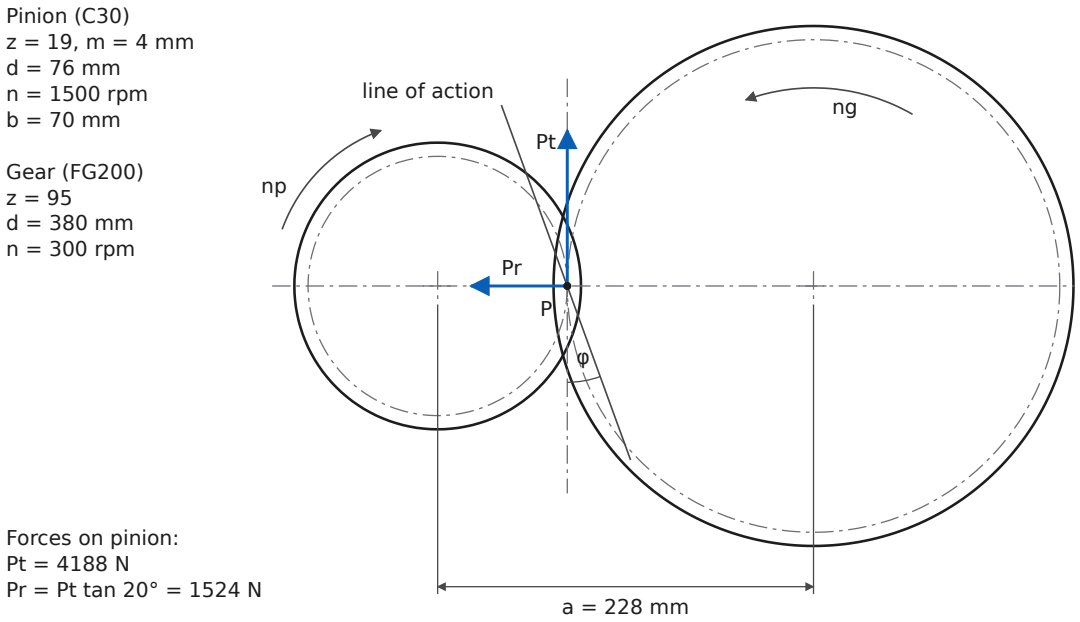

Fig. 10.3 Pair for Q 10.4 (schematic)

4. Wear check

Assumed Steel–CI pair: $\sigma_{es} = 2.8(BHN_{avg}) - 70$ with $BHN_{avg} = (250 + 200)/2 = 225$, so $\sigma_{es} = 560$ N/mm². $E_p = 207$ GPa, $E_g = 100$ GPa.

$$K = \frac{560^2 \sin 20^\circ \cos 20^\circ}{1.4}\left(\frac{1}{207\,000} + \frac{1}{100\,000}\right) = 1.068, \qquad Q = \frac{2(95)}{95 + 19} = 1.667$$

$$S_w = 70(1.667)(76)(1.068) = 9467 \text{ N} > P_{eff} = 8355 \text{ N} \quad (\text{FOS } 1.13)$$

Answer. m = 4 mm; z_p = 19, z_g = 95; d_p = 76 mm, d_g = 380 mm, a = 228 mm; b = 70 mm (hobbed teeth). S_b = 8.47 kN and S_w = 9.47 kN, both ≥ P_{eff} = 8.36 kN, so the design is safe in wear.

Exam tip When the pitch diameter is given, the module is not free: list the standard modules that divide d_p into a whole number of teeth (at least 18), then size b.

Q 10.5 ME-313 (2nd paper) Q6 — 14 marks

It is required to design a pair of spur gears with 20° full-depth involute teeth based on the Lewis equation. The velocity factor is to be used to account for dynamic load. The pinion shaft is connected to a 10 kW, 1440 rpm motor. The starting torque of the motor is 150% of the rated torque. The speed reduction is 4:1. The pinion as well as the gear is made of plain carbon steel 40C8 (S_{ut} = 600 N/mm²). The factor of safety can be taken as 1.5. Design the gears, specify their dimensions and suggest suitable surface hardness for the gears.

SOLUTION

Assumed Starting torque 150% of rated, so $C_s = 1.5$. $z_p = 18$, $z_g = 72$. $\sigma_b = 600/3 = 200$ N/mm². $b = 10m$. Cut teeth, $C_v = 3/(3+v)$.

1. Module

Same material, so the pinion is weaker: $Y = 0.484 - 2.87/18 = 0.3246$. $M_t = \dfrac{60 \times 10^6 (10)}{2\pi(1440)} = 66\,315$ N·mm.

$P_t = \dfrac{2M_t}{18m} = \dfrac{7368.3}{m}$ N, $v = \dfrac{\pi(18m)(1440)}{60\,000} = 1.357m$ m/s, $S_b = m(10m)(200)(0.3246) = 649.1\,m^2$.

$$S_b = f_s \frac{C_s P_t}{C_v}: \quad 649.1\,m^2 = 1.5(1.5)\frac{7368.3}{m}\cdot\frac{3+1.357m}{3} \;\Rightarrow\; m = 4.20\text{ mm} \;\rightarrow\; m = 5\text{ mm}$$

2. Check with m = 5 mm

$d_p = 90$ mm, $d_g = 360$ mm, $b = 50$ mm, $v = 6.786$ m/s, $P_t = 2(66\,315)/90 = 1473.7$ N, $C_v = 0.3066$.

$$P_{eff} = \frac{1.5(1473.7)}{0.3066} = 7210\text{ N}, \qquad S_b = 5(50)(200)(0.3246) = 16\,228\text{ N}, \qquad f_s = \frac{16\,228}{7210} = 2.25 > 1.5$$

3. Dimensions (m = 5 mm)

Item	Formula	Pinion	Gear
Pitch circle dia	mz	90	360
Addendum circle dia	$m(z+2)$	100	370
Dedendum circle dia	$m(z-2.5)$	77.5	347.5
Addendum / dedendum	m / $1.25m$	5 / 6.25	
Clearance, tooth depth	$0.25m$, $2.25m$	1.25, 11.25	
Tooth thickness, fillet radius	$1.5708m$, $0.4m$	7.85, 2.0	
Face width, centre distance	$10m$, $(d_p+d_g)/2$	50, 225	

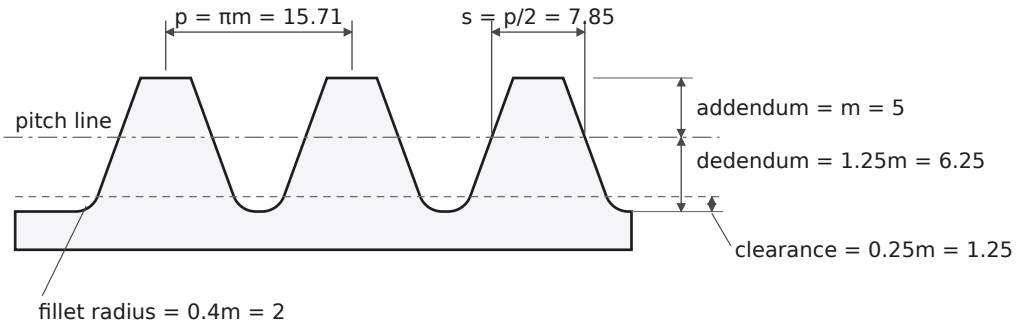

Fig. 10.4 Tooth proportions for m = 5 mm (rack form, mm)

4. Surface hardness

Design for $S_w = f_s P_{eff}$: $Q = \dfrac{2(72)}{72+18} = 1.6$.

$$50(1.6)(90)K = 1.5(7210) \;\Rightarrow\; K = 1.502\ \text{N/mm}^2; \qquad 0.16\left(\frac{BHN}{100}\right)^2 = 1.502 \;\Rightarrow\; BHN = 306$$

Answer. z_p = 18, z_g = 72, m = 5 mm, b = 50 mm, d_p = 90 mm, d_g = 360 mm, a = 225 mm; addendum 5, dedendum 6.25, clearance 1.25, tooth thickness 7.85, fillet radius 2 mm. Surface-harden both gears to at least 306 BHN; specify 320 BHN.

Q 10.6 CME-403 Nov 2024 Q6 — 8 marks

A motor shaft rotating at 1500 rpm is to transmit 15 kW power to a low-speed shaft rotating at 500 rpm. A 20° pressure angle involute tooth gear pinion is used. The pinion has 25 teeth. Both gear and pinion are made of cast iron having allowable strength of 55 N/mm². Design a spur gear on static strength and check it on wear criteria. The allowable surface endurance strength is 500 N/mm².

SOLUTION

Assumed 20° full depth, cut teeth with $C_v = 3/(3+v)$; $C_s = 1$ (55 N/mm² is an allowable stress); $b = 10m$; $E = 100$ GPa for CI.

1. Weaker member

$i = 1500/500 = 3$, so $z_g = 75$. $Y_p = 0.484 - 2.87/25 = 0.3692$ and $Y_g = 0.4457$. Same σ, so the pinion is weaker.

2. Module

$M_t = \dfrac{60\times 10^6(15)}{2\pi(1500)} = 95\,493$ N·mm, $P_t = \dfrac{2M_t}{25m} = \dfrac{7639.4}{m}$, $v = \dfrac{\pi(25m)(1500)}{60\,000} = 1.963m$.

$$m(10m)(55)(0.3692) = 203.1\,m^2 = \frac{7639.4}{m}\cdot\frac{3+1.963m}{3} \;\Rightarrow\; m = 5.60\ \text{mm} \;\rightarrow\; m = 6\ \text{mm}$$

Check: $d_p = 150$ mm, $v = 11.78$ m/s, $P_t = 1273.2$ N, $C_v = 0.2030$, $P_{eff} = 1273.2/0.2030 = 6273$ N. $S_b = 6(60)(55)(0.3692) = 7310\ \text{N} > 6273$ N.

3. Wear

$$K = \frac{500^2 \sin 20^\circ \cos 20^\circ}{1.4}\left(\frac{2}{100\,000}\right) = 1.148, \qquad Q = \frac{2(75)}{75+25} = 1.5$$

$$S_w = 60(1.5)(150)(1.148) = 15\,496\ \text{N} > 6273\ \text{N} \quad (\text{FOS } 2.47)$$

Pinion (CI)
z = 25, m = 6 mm
d = 150 mm
n = 1500 rpm
b = 60 mm

Gear (CI)
z = 75
d = 450 mm
n = 500 rpm

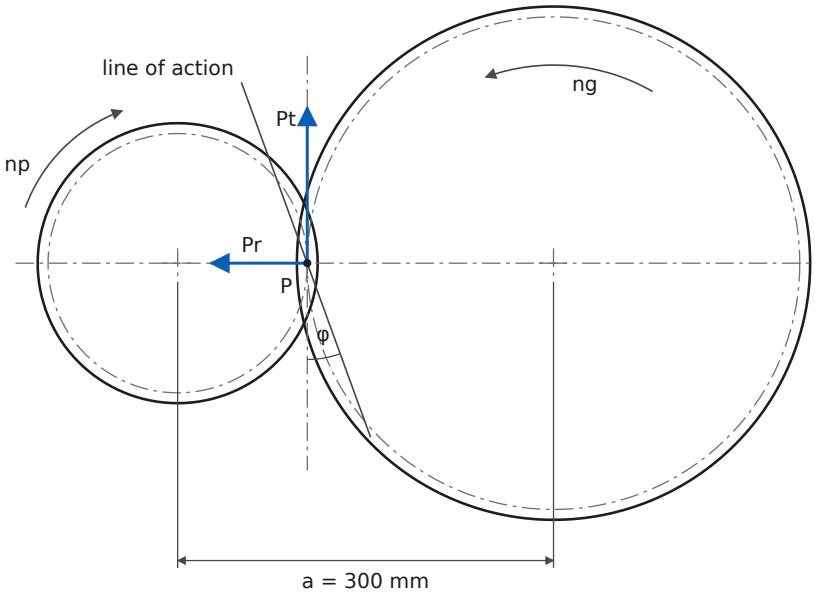

Forces on pinion:
Pt = 1273 N
Pr = Pt tan 20° = 463 N

Fig. 10.5 Pair for Q 10.6 (schematic)

Answer. m = 6 mm; z_p = 25, z_g = 75; d_p = 150 mm, d_g = 450 mm, a = 300 mm; b = 60 mm. S_b = 7.31 kN > P_{eff} = 6.27 kN; S_w = 15.5 kN, safe in wear.

Q 10.7 AE302 May 2024 Q5 — 8 marks

Design a pair of cut-teeth spur gears with 20° full depth teeth to be made of high carbon steel. The gears are to transmit 50 kW at 2500 rpm of the pinion with a velocity ratio of 1.5.

SOLUTION

Assumed Both gears high-carbon steel 55C8: $S_{ut} = 720$ N/mm², $\sigma_b = 240$ N/mm², surface hardened. Service factor $C_s = 1.25$, $f_s = 1.5$, $z_p = 20$, $z_g = 30$, $b = 10m$. The pitch-line speed works out to 10–20 m/s, so use accurately cut (hobbed) teeth, $C_v = 6/(6+v)$.

1. Module

$Y_p = 0.484 - 2.87/20 = 0.3405$ (the pinion is weaker). $M_t = \dfrac{60 \times 10^6 (50)}{2\pi(2500)} = 190\,986$ N·mm, $P_t = \dfrac{2M_t}{20m} = \dfrac{19\,099}{m}$, $v = 2.618m$.

$$m(10m)(240)(0.3405) = 817.2\,m^2 = 1.5(1.25)\frac{19\,099}{m}\cdot\frac{6+2.618m}{6} \;\Rightarrow\; m = 5.24 \;\rightarrow\; m = 6\ \text{mm}$$

$d_p = 120$ mm, $d_g = 180$ mm, $b = 60$ mm, $v = 15.71$ m/s, $P_t = 3183$ N, $C_v = 0.2764$, $P_{eff} = 1.25(3183)/0.2764 = 14\,396$ N, $S_b = 6(60)(240)(0.3405) = 29\,419$ N ($f_s = 2.04$).

2. Dynamic load check (Buckingham)

Assumed Accurately hobbed teeth, error $e = 0.02$ mm, so $C = 11\,400e = 228$ N/mm.

$$P_d = \frac{21(15.71)\,[60(228)+3183]}{21(15.71)+\sqrt{60(228)+3183}} = \frac{329.9(16\,863)}{329.9+129.9} = 12\,100\ \text{N}$$

$$P_{eff} = C_s P_t + P_d = 1.25(3183) + 12\,100 = 16\,079\ \text{N}, \qquad \frac{S_b}{P_{eff}} = \frac{29\,419}{16\,079} = 1.83 > 1.5$$

3. Surface hardness from wear

$Q = \dfrac{2(30)}{30+20} = 1.2$. Required: $S_w = f_s P_{eff}$.

$$60(1.2)(120)K = 1.5(16\,079) \;\Rightarrow\; K = 2.791\ \text{N/mm}^2 \;\Rightarrow\; BHN = 100\sqrt{2.791/0.16} = 418$$

Pinion (55C8)
z = 20, m = 6 mm
d = 120 mm
n = 2500 rpm
b = 60 mm

Gear (55C8)
z = 30
d = 180 mm
n = 1667 rpm

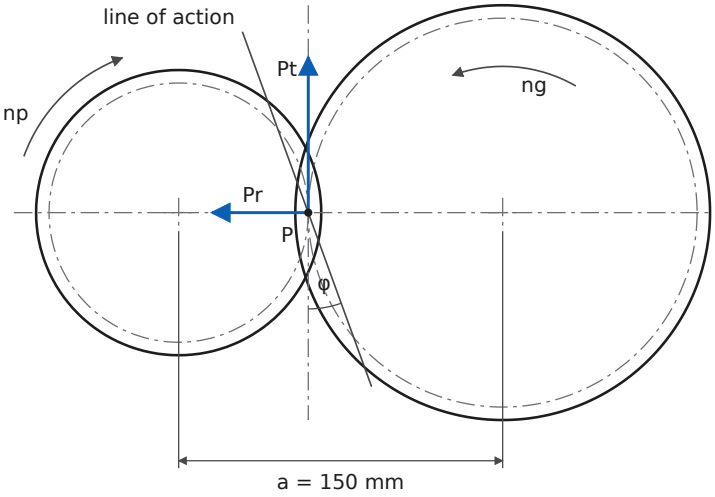

Forces on pinion:
Pt = 3183 N
Pr = Pt tan 20° = 1159 N

Fig. 10.6 Pair for Q 10.7 (schematic)

Answer. 55C8 steel, hobbed teeth; z_p = 20, z_g = 30, m = 6 mm, b = 60 mm, d_p = 120 mm, d_g = 180 mm, a = 150 mm. P_{eff} = 16.1 kN (Buckingham), S_b = 29.4 kN; surface-harden to 420 BHN.

Helical gears

Q 10.8 AE302 May 2023 Q5 — 8 marks

Design a pair of cast teeth helical gears with 20° full depth system to transmit 75 kW at 1200 rpm of the pinion with a velocity ratio of 2.5.

SOLUTION

Assumed Helix angle ψ = 30°, normal pressure angle 20°. Both gears heat-treated cast steel: allowable $\sigma_b = 193$ N/mm², 250 BHN. $C_s = 1.25$ (σ_b is already an allowable stress, so no extra f_s). Cast teeth: $C_v = 3/(3+v)$. $z_p = 20$, $z_g = 50$, $b = 10m_n$.

1. Virtual teeth and the weaker member

$$z_p' = \frac{20}{\cos^3 30^\circ} = 30.79, \qquad Y = 0.484 - \frac{2.87}{30.79} = 0.3908$$

The pinion is weaker (same material). $M_t = \dfrac{60\times 10^6(75)}{2\pi(1200)} = 596\,831$ N·mm.

2. Normal module

$d_p = \dfrac{20 m_n}{\cos 30^\circ} = 23.094 m_n$, $P_t = \dfrac{2M_t}{d_p} = \dfrac{51\,687}{m_n}$, $v = \dfrac{\pi d_p (1200)}{60\,000} = 1.451 m_n$, $S_b = m_n (10 m_n)(193)(0.3908) = 754.2\, m_n^2$.

$$754.2\, m_n^2 = 1.25 \frac{51\,687}{m_n} \cdot \frac{3 + 1.451 m_n}{3} \;\Rightarrow\; m_n = 7.29 \text{ mm} \;\rightarrow\; \text{try } 8 \text{ mm}$$

3. Wear decides

$K = 0.16(250/100)^2 = 1.0$ N/mm², $Q = \dfrac{2(50)}{50 + 20} = 1.4286$.

m_n (mm)	d_p (mm)	v (m/s)	P_t (N)	P_{eff} (N)	S_b (N)	S_w (N)	Result
8	184.75	11.61	6461	39 326	48 271	28 153	wear fails
10	230.94	14.51	5169	37 711	75 423	43 989	OK

For $m_n = 10$: $C_v = 3/(3 + 14.51) = 0.1713$, $P_{eff} = 1.25(5169)/0.1713 = 37\,711$ N.

$$S_w = \frac{b Q d_p K}{\cos^2 \psi} = \frac{100(1.4286)(230.94)(1.0)}{0.75} = 43\,989 \text{ N} > 37\,711 \text{ N}$$

Overlap check: $b = 100 \geq 1.15\pi(10)/\sin 30^\circ = 72.3$ mm. $d_g = 50(10)/\cos 30^\circ = 577.35$ mm.

4. Tooth forces

$P_t = 5169$ N, $P_r = \dfrac{5169 \tan 20^\circ}{\cos 30^\circ} = 2172$ N, $P_a = 5169 \tan 30^\circ = 2984$ N.

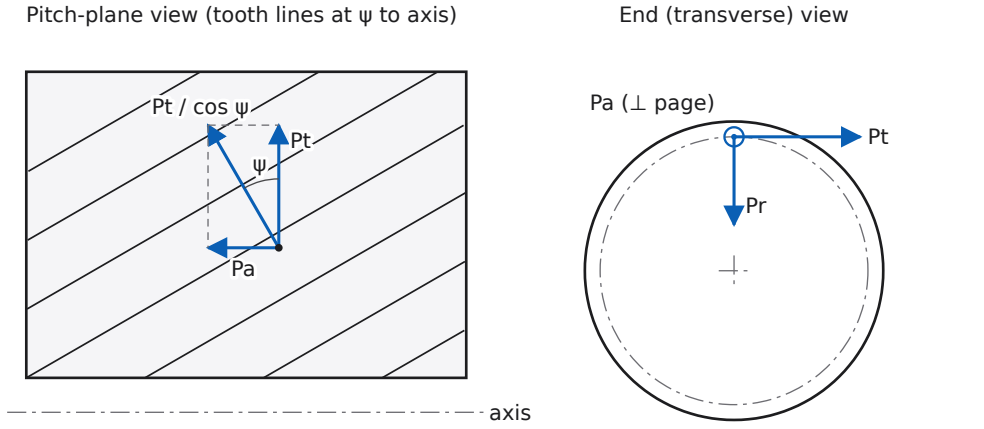

O 10.8: Pt = 5169 N. Pr = 2172 N. Pa = 2984 N

Fig. 10.7 Helical gear tooth forces: the normal force splits into P_t, P_a (pitch plane) and P_r (end view)

Answer. ψ = 30°, m_n = 10 mm, z_p = 20, z_g = 50, b = 100 mm; d_p = 230.94 mm, d_g = 577.35 mm, a = 404.1 mm; cast steel 250 BHN. S_b = 75.4 kN, S_w = 44.0 kN, P_{eff} = 37.7 kN.

Exam tip Cast teeth are rough, so $C_v = 3/(3+v)$ is very punishing at 14 m/s; that is why this pair comes out large. Say in one line that machined (hobbed) teeth would roughly halve the size; examiners like the remark.

Q 10.9 ME262 May 2023 Q5 — 8 marks

Design a pair of cast teeth helical gears for transmitting 25 kW at 1800 rpm of the driver gear and 600 rpm of the driven gear. The helix angle is 30° and the profile is corresponding to 20° full-depth

system. The driven gear has 24 teeth and the overhang of each gear is 150 mm.

SOLUTION

0. Reading the data

$i = 1800/600 = 3$. Taken literally, the driver (pinion) has $24/3 = 8$ teeth. For 20° FD helical teeth with ψ = 30° the minimum number of teeth that avoids undercut is $z_{min} = \dfrac{2\cos^3\psi}{\sin^2\phi} = 11.1$, so an 8-tooth pinion undercuts. Taken literally anyway, $z' = 8/\cos^3 30^\circ = 12.3$ and $Y = 0.251$; strength needs $m_n = 5.85 \to 6$ mm, but even then $S_w/P_{eff} = 0.41$ (it would need about 393 BHN, beyond cast steel). **As written, the drive is not feasible.** The problem is the textbook one (Khurmi) in which the *driver* has 24 teeth, so design with $z_p = 24$, $z_g = 72$.

Assumed Same material and factors as Q 10.8: cast steel, $\sigma_b = 193$ N/mm², 250 BHN ($K = 1.0$), $C_s = 1.25$, $C_v = 3/(3+v)$, $b = 10m_n$. Shaft: allowable shear stress 50 N/mm².

1. Module

$z'_p = 24/\cos^3 30^\circ = 36.95$, $Y = 0.484 - 2.87/36.95 = 0.4063$. $M_t = \dfrac{60\times10^6(25)}{2\pi(1800)} = 132\,629$ N·mm.

$d_p = 27.713m_n$, $P_t = \dfrac{9571.7}{m_n}$, $v = 2.612m_n$, $S_b = m_n(10m_n)(193)(0.4063) = 784.2\,m_n^2$.

$$784.2\,m_n^2 = 1.25\frac{9571.7}{m_n}\cdot\frac{3+2.612m_n}{3} \;\Rightarrow\; m_n = 4.12 \;\to\; m_n = 5\text{ mm}$$

2. Checks with m_n = 5 mm

$d_p = 138.56$ mm, $d_g = 415.69$ mm, $b = 50$ mm ($\ge 1.15\pi(5)/\sin 30^\circ = 36.1$), $v = 13.06$ m/s, $P_t = 1914$ N, $C_v = 0.1868$.

$$P_{eff} = \frac{1.25(1914)}{0.1868} = 12\,810\text{ N}, \qquad S_b = 784.2(5^2) = 19\,605\text{ N}\ (1.53\times)$$

$$S_w = \frac{50(1.5)(138.56)(1.0)}{\cos^2 30^\circ} = 13\,856\text{ N} > 12\,810\text{ N} \quad (Q = 2\cdot72/96 = 1.5)$$

3. Overhang: shaft loading

$P_r = 1914\tan20^\circ/\cos30^\circ = 805$ N, $P_a = 1914\tan30^\circ = 1105$ N. At the bearing next to the overhung gear (arm 150 mm), P_a also adds a couple $P_a d/2$ in the radial plane:

$$M_H = 1914(150) = 287.2\text{ N·m}, \qquad M_V = 805(150) + 1105\,\frac{138.56}{2} = 197.3\text{ N·m}$$

$$M = \sqrt{M_H^2 + M_V^2} = \sqrt{287.2^2 + 197.3^2} = 348.4\text{ N·m}$$

$$T_e = \sqrt{348.4^2 + 132.6^2} = 372.8\text{ N·m}, \qquad d = \left(\frac{16(372.8\times10^3)}{\pi(50)}\right)^{1/3} = 33.6 \;\to\; 35\text{ mm}$$

Gear shaft (same forces, $d/2 = 207.8$ mm, $T = 397.9$ N·m): $M = 453.0$ N·m, $T_e = 603.0$ N·m, $d = 39.5 \to 40$ mm.

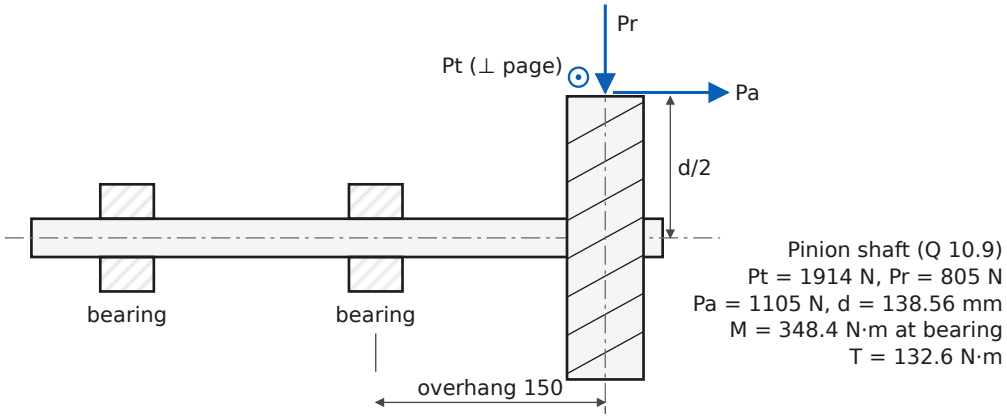

Fig. 10.8 Overhung helical pinion: tooth forces and the 150 mm overhang

Answer. (Driver 24 teeth.) $\psi = 30°$, $m_n = 5$ mm, $z_p = 24$, $z_g = 72$, $b = 50$ mm, $d_p = 138.56$ mm, $d_g = 415.69$ mm, $a = 277.1$ mm. $S_b = 19.6$ kN, $S_w = 13.9$ kN, $P_{eff} = 12.8$ kN. Tooth forces $P_t = 1914$ N, $P_r = 805$ N, $P_a = 1105$ N. Shafts at 150 mm overhang: 35 mm (pinion), 40 mm (gear). As printed (driver 8 teeth), the pinion undercuts and fails in wear.

Exam tip If a printed number makes the design impossible, say so in two lines, state your corrected reading, and carry on. You get credit for spotting it.

11 Clutches and brakes

Centrifugal and multi-disc friction clutches and the differential band brake. These appear in the AE and ME262 papers as 8–14 mark design questions.

KEY FORMULAS

- Torque: $T = \dfrac{60 \times 10^6\,(\text{kW})}{2\pi n}$ N·mm
- Centrifugal clutch: $P_c = m\omega^2 r$; spring force $P_s = m\omega_1^2 r$ at engagement speed ω_1; $T = \mu(P_c - P_s)Rn$ (n shoes); shoe contact $l = R\theta$, and $P_c - P_s = l\,b\,p$
- Multi-disc clutch, uniform wear: $P = \dfrac{\pi}{2}\,p_{max}\,d\,(D-d)$, $T = \mu P n\,\dfrac{D+d}{4}$ (n = number of pairs of friction surfaces = $n_1 + n_2 - 1$)
- Band brake: $\dfrac{T_1}{T_2} = e^{\mu\theta}$, braking torque $(T_1 - T_2)R$; differential band brake (both band ends on the lever, on opposite sides of the fulcrum): $P\,l = T_2 b - T_1 a$, self-locking if $T_2 b \le T_1 a$, i.e. $b/a \le e^{\mu\theta}$
- Band: $T_1 = \sigma_t\,w\,t$; maximum lining pressure $p_{max} = T_1/(wR)$

Q 11.1 AE-311 Jul 2021 Q4 — 14 marks

A centrifugal clutch has driving member consisting of a spider carrying four shoes which are kept from contact with the clutch by means of flat springs until increase of centrifugal force overcomes the resistance of the springs and the power is transmitted by the friction between the shoes and the case. Determine the necessary mass and size of each shoe if 22.5 kW is to be transmitted at 750 rpm with engagement beginning at 75% of the running speed. The inside diameter of the drum is 300 mm and the radial distance of the centre of gravity of each shoe from the shaft axis is 125 mm. Assume μ = 0.25.

SOLUTION

Assumed Shoe contact angle θ = 60°; allowable lining pressure $p = 0.1$ N/mm² (Ferodo-type lining); shoe material cast iron, ρ = 7200 kg/m³ (for the thickness check only).

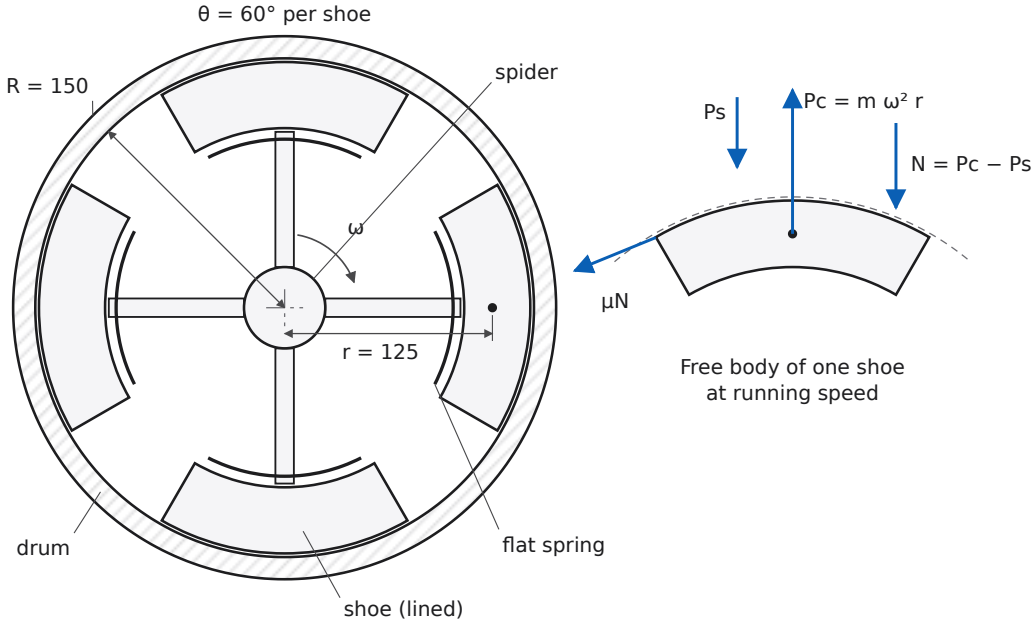

Fig. 11.1 Centrifugal clutch with four shoes, and the free body of one shoe at running speed

1. Torque and speeds

$$T = \frac{60 \times 10^6 (22.5)}{2\pi(750)} = 286\,479 \text{ N·mm}, \qquad \omega = \frac{2\pi(750)}{60} = 78.54 \text{ rad/s}, \qquad \omega_1 = 0.75\omega = 58.90 \text{ rad/s}$$

2. Net radial force per shoe

Friction torque from the four shoes at drum radius $R = 150$ mm:

$$T = \mu(P_c - P_s)R\,n \;\Rightarrow\; P_c - P_s = \frac{286\,479}{0.25(150)(4)} = 1909.9 \text{ N}$$

3. Mass of each shoe

The spring holds the shoe until ω_1, so $P_s = m\omega_1^2 r$ and $P_c = m\omega^2 r$, with $r = 0.125$ m:

$$P_c - P_s = mr\omega^2(1 - 0.75^2) = m(0.125)(78.54)^2(0.4375) = 337.3\,m = 1909.9 \;\Rightarrow\; m = 5.66 \text{ kg}$$

$P_c = 5.66(0.125)(78.54)^2 = 4365$ N; spring force $P_s = 5.66(0.125)(58.90)^2 = 2456$ N.

4. Size of each shoe

$$l = R\theta = 150\left(\frac{\pi}{3}\right) = 157.1 \text{ mm}, \qquad b = \frac{P_c - P_s}{l\,p} = \frac{1909.9}{157.1(0.1)} = 121.6 \;\rightarrow\; 125 \text{ mm}$$

Check on proportions: radial thickness $t = \dfrac{m}{\rho\, l\, b} = \dfrac{5.66}{7200(0.1571)(0.125)} = 0.040$ m = 40 mm. A 40 mm shoe hugging the 150 mm drum has its CG near $150 - 20 = 130$ mm, consistent with the given 125 mm.

> **Answer.** Mass of each shoe m = 5.66 kg; spring force per shoe P_S = 2.46 kN (P_C = 4.37 kN at 750 rpm); shoe arc length 157 mm (60°) × width 125 mm (≈ 40 mm thick).

Exam tip The spring force is set by the engagement speed, not by the running speed: at 75% speed $P_C = P_S$, so the useful force at full speed is only $(1 - 0.75^2) = 44\%$ of P_C.

Q 11.2 ME262 May 2023 Q6 · AE302 May 2024 Q6 — 8 marks

Design a friction clutch with hardened steel clutch plates of inner and outer friction surface diameters of 50 mm and 75 mm respectively. The clutch is to transmit 4 kW at 825 rpm in oil atmosphere.

Variant (AE302 May 2024 Q6): 6 kW at 800 rpm (solved at the end).

SOLUTION

Assumed Small diameters and an oil bath call for a **multi-disc wet clutch**. Hardened steel on hardened steel in oil: μ = 0.1, $p_{max} = 0.35$ N/mm² (a conservative pressure to limit heating). Uniform-wear theory (plates are run in).

1. Torque

$$T = \frac{60 \times 10^6 (4)}{2\pi(825)} = 46\,300 \text{ N·mm}$$

2. Axial force at the permissible pressure

$$P = \frac{\pi}{2} p_{max} d(D - d) = \frac{\pi}{2}(0.35)(50)(75 - 50) = 687.2 \text{ N}, \qquad R_m = \frac{D + d}{4} = \frac{75 + 50}{4} = 31.25 \text{ mm}$$

3. Number of friction surfaces

$$T = \mu P n R_m \;\Rightarrow\; n = \frac{46\,300}{0.1(687.2)(31.25)} = 21.6 \;\rightarrow\; n = 22 \text{ (even)}$$

Plates: $n_1 + n_2 - 1 = 22$, so **12 outer (driving) plates** splined to the housing and **11 inner (driven) plates** splined to the hub, 23 plates in all. With an even n both end plates belong to the same member, so the end thrust stays inside that member.

4. Spring force and actual pressure

$$P = \frac{T}{\mu n R_m} = \frac{46\,300}{0.1(22)(31.25)} = 673.4 \text{ N}, \qquad p_{max} = \frac{673.4}{\frac{\pi}{2}(50)(25)} = 0.343 \text{ N/mm}^2 \le 0.35$$

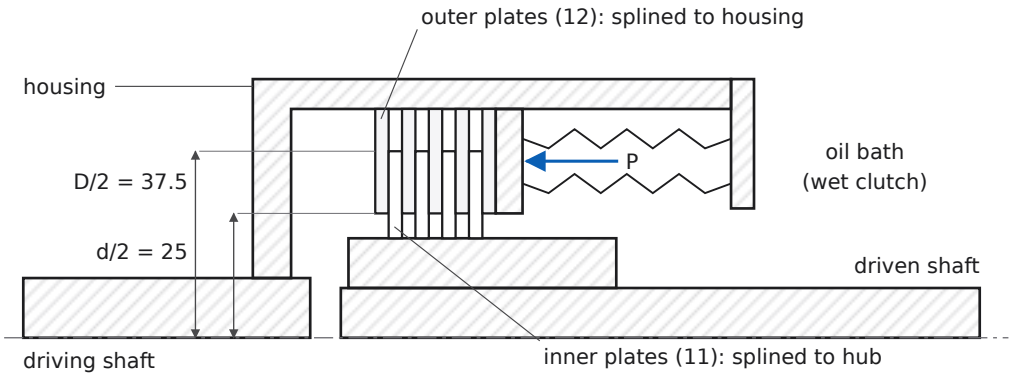

Fig. 11.2 Multi-disc wet clutch (half section, schematic; only a few of the plates are drawn)

Answer. Multi-disc wet clutch, D = 75 mm, d = 50 mm; 22 pairs of friction surfaces: 12 steel plates on the driving shaft (housing) and 11 on the driven shaft (hub); axial spring force P = 674 N (p_{max} = 0.343 N/mm²).

Variant: 6 kW at 800 rpm

$T = \frac{60 \times 10^6 (6)}{2\pi(800)} = 71\,620$ N·mm; $n = \frac{71\,620}{0.1(687.2)(31.25)} = 33.3 \rightarrow 34$; plates 18 + 17; $P = \frac{71\,620}{0.1(34)(31.25)} = 674.1$ N.

Answer (variant). 34 friction surfaces: 18 plates on the driving shaft and 17 on the driven shaft; spring force 674 N.

Exam tip If you take the higher data-book values for hardened steel in oil (μ = 0.08, p = 0.7 N/mm²), n drops to 14 (4 kW) and 22 (6 kW). Either is accepted if stated; what matters is n even, $n_1 + n_2 - 1 = n$, and the spring force.

Q 11.3 AE302 May 2023 Q6 — 8 marks

Design a differential band brake having an operating lever 225 mm long. The ends of the brake band are attached so that their operating arms are 40 mm and 130 mm long. The brake drum diameter is

0.6 m and the arc of contact is 310°. The coefficient of friction may be taken as 0.2.

SOLUTION

Assumed The paper prints "225 m"; read it as 225 mm. No load is given, so design for a braking torque of 500 N·m. Steel band with allowable tensile stress 70 N/mm² and width $w \approx 8t$. Lever length measured from the fulcrum. Arms: $a = 40$ mm, $b = 130$ mm.

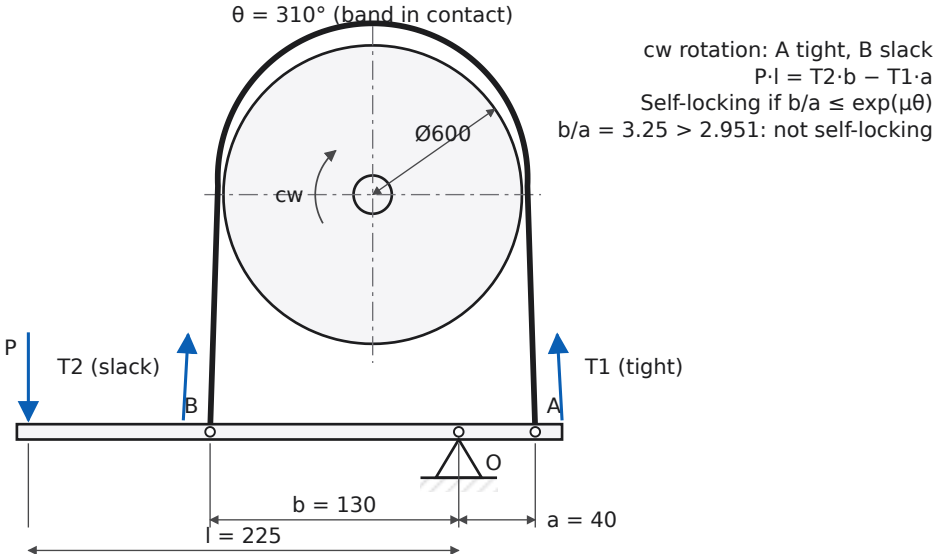

Fig. 11.3 Differential band brake (schematic, not to scale)

1. Tension ratio

$$\theta = 310\left(\frac{\pi}{180}\right) = 5.411 \text{ rad}, \qquad \frac{T_1}{T_2} = e^{0.2(5.411)} = e^{1.0821} = 2.951$$

2. Band tensions

$$T_1 - T_2 = \frac{500 \times 10^3}{300} = 1666.7 \text{ N} \;\Rightarrow\; T_2 = \frac{1666.7}{2.951 - 1} = 854.3 \text{ N}, \quad T_1 = 2521 \text{ N}$$

3. Operating force, both directions

Moments about the fulcrum O. Pressing the lever down at C pulls end B (arm b) away from the drum and lets end A (arm a) move toward it, a net tightening of $(b - a)\delta$.

Clockwise drum (A tight, B slack):

$$P\,l = T_2 b - T_1 a \;\Rightarrow\; P = \frac{854.3(130) - 2521(40)}{225} = \frac{111\,059 - 100\,839}{225} = 45.4 \text{ N}$$

Anticlockwise drum (B tight, A slack):

$$P\,l = T_1 b - T_2 a \;\Rightarrow\; P = \frac{2521(130) - 854.3(40)}{225} = 1305 \text{ N}$$

The brake is meant for clockwise rotation; in reverse it needs 29 times the force.

4. Self-locking check

Self-locking needs $T_2 b \le T_1 a$, i.e. $b/a \le e^{\mu\theta}$. Here $b/a = 130/40 = 3.25 > 2.951$, so the brake is **not self-locking** but close to it. It would lock if μ rose to $\ln(3.25)/5.411 = 0.218$, so keep the lining dry and its μ controlled.

5. Band size

$$T_1 = \sigma_t w t = 70(8t)t \;\Rightarrow\; t = \sqrt{\frac{2521}{560}} = 2.12 \text{ mm} \;\rightarrow\; t = 2.5 \text{ mm},\; w = 8t = 20 \text{ mm}$$

Check: $\sigma_t = \dfrac{2521}{20(2.5)} = 50.4$ N/mm² < 70. Lining pressure $p_{max} = \dfrac{T_1}{wR} = \dfrac{2521}{20(300)} = 0.42$ N/mm², acceptable for woven lining.

Answer. For 500 N·m: T_1 = 2521 N, T_2 = 854 N; operating force P = 45.4 N (clockwise) and 1305 N (anticlockwise); not self-locking (b/a = 3.25 > $e^{\mu\theta}$ = 2.951); steel band 20 mm × 2.5 mm. (Alternative basis: a 100 N hand force on the clockwise drum gives T_2 = 1881 N and a braking torque of 1101 N·m.)

Exam tip For a differential band brake always state both directions and the self-locking condition. The small P here comes from b/a being just above $e^{\mu\theta}$; that is the point of the design.

A Original question papers

Scans of every paper used in this book, as found in the Drive folder, so you can check figures and wording against the source.

Total No. of Pages _2 Roll No. .....

SIXTH SEMESTER

B.Tech (ME)

END SEMESTER EXAMINATION May-2023

ME304 Design of Machine Elements

Time: 3:00 Hours Max. Marks : 40

Note : Answer any five questions.
All questions carry equal marks. Assume suitable missing data, if any. Design Data H/Book is NOT allowed

Q.1[a] Explain the following types of fits, with examples:
(i) Clearance fit (ii) Transition fit and (iii) Interference fit. [2] CO-1

[b] Show that hollow shaft is stronger and stiffer than a solid shaft for the same weight and material? [2] CO-1

[c] A thin pressure vessel (radius/thickness=20) closed at both ends is pressurised to 7MPa as test pressure. If the yield strength of the material is 450MPa, determine the factor of safety on the basis of maximum shear stress theory and distortion energy theory. [2]CO-1

[d] How localised stresses in machine component be avoided? Explain with diagrams. [2]CO-2

Q.2 A long thin pressure vessel of AISI1020 (Yield stress 350MPa) with 70mm internal diameter and 2.5mm thick is subjected to an internal pressure of 6MPa. If the cylinder is also subjected to a twisting moment of 70Nm, determine the factor of safety on the basis of Maximum Principal stress, Maximum shear and Distortion energy theory. Which theory of failure is better for this design? [8]CO-1

Q.3 Design a simple cotter joint for an axial load of 100kN. Assume that all the parts are made of same material with permissible stresses of 70MPa, 50MPa and 90MPa in tension, shear and compression respectively. [8]CO-2

Q.4 Design a screw and nut of a vertical screw jack to raise or lower a load of 50kN to a height of 300mm. Screw is made of SAE1030 alloy steel

P01 · ME304 · May2023 · p1

364

with yield strength in tension and compression of 324MPa and 200MPa in shear. Assume that the nut is made of Phosphor Bronze with permissible stresses in tension, compression and shear of 42MPa, 38MPa and 35MPa respectively. A friction of 0.15 and bearing pressure 15MPa is adopted for the design. [8]CO-4

Q.5 A motor shaft rotating at 1440 rpm has to transmit 25 hp to a low speed shaft with a speed reduction of 3:1. The teeth of spur gears are 20° full depth involutes, with 18 teeth on pinion. Both pinion and gear are made of same material with permissible bending stress of 138MPa. Design the gears from stand point of strength, dynamic load and wear. Assume a Velocity factor (Cv) =3/(3 + v) , where v is pitch line velocity in m/s. Determine the module, face width and pitch diameter of gears. The surface endurance of the material is σ_{es} = 600 MPa; Modulus of Elasticity of pinion and gear = 200 GPa. Assume a first class commercial gear having an error of 0.07mm for which C=283kN/m. The wear factor K_w is 1.4 and endurance strength in bending is 1.75xBHN for the pinion. Hardness of the pinion is 180BHN. Select a service factor of 1.5 for the operation of the gear drive. [8]CO-5

Q.6 Design a Bush-pin type flexible coupling for transmission of 30kW from a motor to a centrifugal pump at 1448rpm. The following data is given: Diameter of motor shaft=38mm, Diameter of pump shaft=30mm, No. of bolts=6 nos. Allowable Shear stress for the bolts, keys and shaft=55MPa, Allowable shear stress for the flanges=12MPa. Assume crushing stress twice the shearing stress in all cases. [8]CO-6

Q.7 Design a triple riveted butt joint with zigzag fashion with five rivets in one pitch length and with double cover plates of equal widths for a boiler drum. The thickness of the main plate is 15mm. The allowable tensile stress, compressive stress and shearing stress of the steel used are 75MPa, 100MPa and 58MPa respectively. The efficiency of the joint should not be less than 75%. Assume that the boiler plate and rivets are made of the same steel. [8]CO-3

END

Total No. of Pages _03

Roll No. 2K21/ME/113

SIXTH SEMESTER

B.Tech(Mechanical Engg)

END SEMESTER EXAMINATION *May -2024*

PAPER CODE ME304 & TITLE OF PAPER: Design of Machine Elements

Time: 3:00 Hours

Max. Marks : 40

Note :Answer any five questions, Use of Design Data HB is permitted but only one from any author, Photocopies of DDHB are not allowed.
All questions carry equal marks.
Assume suitable missing data, if any.

Q.1[a] How is the fatigue life of a spring enhanced? Discuss the stresses in a closed coil helical spring. CO-1

[b] How the localised stresses in machine component be avoided? Explain with diagrams. CO-1

[c]How is a power screw different from a fastening screw? How are the threads selected for power transmission? CO-1

[d]Show that the hollow shaft is stronger than the solid shaft having same weight, length and made of same material? CO-1

[2x4=8]

Q.2 Design only a screw and nut for a vertical screw jack to raise and lower a load of 30kN to a height of 250mm. Screw is made of AISI1030 alloy steel with allowable strength in tension and compression of 60MPa and 40MPa in shear, respectively. Assume that the nut is made of Phosphor Bronze with permissible stresses in tension, compression and shear of 42MPa, 38MPa and 35MPa respectively. Take a friction value of 0.15 and a bearing pressure 15MPa on the screw. Draw a well labelled sketch also. CO-2[8]

Q.3 A horizontal hollow shaft is simply supported on two bearings 850mm apart. A spur gear with 20° full depth profile and PCD of 250mm is keyed to the shaft at a distance of 200mm from the left hand bearing and transmits torque vertically down ward to a gear. A 600mm diameter pulley is mounted on the shaft at a distance of 250mm from the right hand bearing and receives 30kW at 280rpm from a belt drive located horizontally to the right of the shaft so that the tension in slack side is one third the tight side with angle of wrap of 180° and coefficient of friction for belt and pulley 0.24. Design the shaft as per ASME shafting code if the allowable bending and shearing stress in the shaft material is 80MPa and 45MPa respectively. Assume the shock factor for bending and torsion as 1.5 and the ratio of diameters be 0.5. CO-4[8]

Q.4. (a)What is nipping in leaf springs? Derive an expression to determine the equalized stress in a leaf spring. CO-3[4]

(b) An engine valve spring having a mean coil diameter of 36mm deflects by 12.5mm at a maximum load of 450N. The working stress in the wire is not to exceed 300MPa. Determine the size for the wire and number of coils to be used. CO-3[4]

Q.5 (a) Design a triple riveted butt and circumferential joint with rivets arranged in zig-zag fashion having five rivets in one pitch length and with double cover plates of equal widths for a boiler drum subjected to a pressure of 1.0MPa. The thickness of the main plate is 15mm. The allowable tensile stress, compressive stress and shearing stress of the steel used are 75MPa, 100MPa and 58MPa respectively. The efficiency of the joint should not be less than 75%. Assume that the boiler plate and rivets are made of the same steel. CO-2[4]

(b) The bolts (as shown in Figure) are to be designed for a rigid bracket to carry a load of 50kN. Assume that maximum allowable shear stress in the bolt in shank area is 40MPa. All dimensions are in mm. CO-4[4]

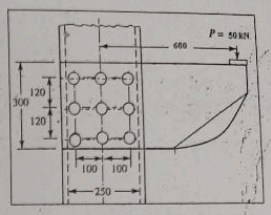

Q.6 Design a rigid protected type flange coupling made of FG200 for transmission of 30kW from a motor to a centrifugal pump at 1448rpm. Each half of the flange is keyed to the shaft using two keys located at 90° apart from each other.
Diameter of motor shaft and pump shaft =38mm
No. of bolts=6 nos.
Allowable Shear stress for the bolts, keys and shaft made of SAE1030= 55MPa. Allowable shear stress for the Cast iron flanges=12MPa. Assume crushing stress twice the shearing stress in all the cases. CO-5 [8]

Q.7 A pair of spur gears is to transmit 25kW. The teeth are 20° full depth involute profile. The Cast steel pinion (σ_d=100MPa) is to drive a cast iron gear (σ_d=55MPa) at 150 r.p.m. and the velocity ratio is 1:6. If the pinion is surface hardened to 250BHN, determine the proper module, number of teeth and face width for these gears from the standpoint of strength, dynamic load and wear. Assume a first class commercial gear having an error of 0.07mm for which C=283kN/m. The wear factor K_w is 1.4 and endurance strength in bending is 1.5xBHN for the pinion material. CO-6 [8]

P02 · ME304 · May2024 · p2

Sixth Semester B.Tech.(ME)_M2 &M4 Roll No._____

MID SEMESTER EXAMINATION 13th March, 2024

ME-304 DESIGN of MACHINE ELEMENTS

Time : 1:30 Hours **Max. Marks: 20**

Note : *All questions carry equal marks. Assume missing data suitably, if any.*

Q1. A long thin walled cylindrical vessel made of AISI1020 (yield strength=300MPa) with internal diameter of 800mm with closed ends is subjected to a uniform internal pressure of 2MPa. Assuming the elastic modulus and Poisson's ratio as 200GPa and 0.3, respectively,. determine the thickness of the shell based on maximum shear stress and distortion energy theory of failure. CO_1 [5]

Q2. Design a Knuckle joint completely if the fork and eye end of joint have same thickness to sustain an axial load of 25kN. Assume that knuckle pin is made of AISI1020 steel with allowable stresses in tension, compression and shear as 50MPa, 100MPa and 40MPa respectively. CO_2 [5]

Q3. A fork of universal coupling, is to be assembled with a gear shaft of diameter 50mm providing a fit 50H8f8 and constrained with a keyed joint between the shaft and the coupling with a fit of 16H7n6. The fundamental deviations for the f and n types of shafts are $\mathbf{f=(-5.5D^{0.41}}$)μm and for $\mathbf{n=(+5D^{0.34}}$)μm, respectively. The values of tolerance may be computed from [$i=0.45\sqrt[3]{D}+0.001D$]μm and the multiplier for quality IT6, IT7 and IT8 are 10, 16 and 25, respectively. Determine the sizes & tolerances and indicate the type of fit for the assembly. CO_3 [5]

Q4. A hot rolled steel rod made of AISI4045 steel is subjected to a torsional load that varies from -110Nm to 440Nm. If the yield and tensile strengths of the material is 310MPa and 460MPa, respectively, determine the required diameter of the rod using a factor of safety of 1.75 for infinite life using only Goodman criteria. CO_4 [5]

P03 · ME304 · Mid · Mar2024

rs%20mid%20term%20examination%20sep%202019%20btech%20(1,3,5,7).pdf
k Copilot
263 of 343

Total No. of Pages :02 250 — Roll No. .....

FIFTH SEMESTER B.Tech [ME]

MID SEMESTER EXAMINATION *Sept -2019*

ME305 Design of Machine Elements

Time: 1:30 Hours *Max. Marks : 30*

Note : Answer all questions.
All questions carry equal marks. Assume suitable missing data, if any. Design Data H/Book is allowed

Q.1[a] Differentiate stress life approach and strain life approach model for design. [2]

[b] What is theoretical and actual stress concentration factor? How does stress concentration vary with orientation of elliptical hole w.r.t. the applied axial load in a plate of thickness t? [2]

[c] The state of stress at a point in a shaft is given by σ_x , σ_y and τ_{xy} 81MPa, 21MPa and 84MPa, respectively. If the yield strength of the material is 280MPa determine the FOS by distortion energy theory of failure. [2]

[e] Differentiate hole basis system and shaft basis system? Explain the type of fit with applications : (i) 50H11d8 and (ii) 40H7u6 [2]

[f] Discuss the effects of mean stress on fatigue of a component using Haigh-Soderberg diagram. [2]

Q.2 A shaft made of AISI4340 with UTS of 650MPa is subjected to complete reversed bending stresses for the following percentage of time: ±400MPa for 75% of time, ±480MPa for 13% of time, ±600MPa for 7% of time and ±300MPa for 5% of time. Draw SN diagram and determine life of the shaft in number of cycles. [10]

P04 · ME305 · Mid · Sep2019 · p1

...ination%20sep%202019%20btech%20(1,3,5,7).pdf
Ask Copilot
264 of 343

Q. 3 Select a suitable material for a crank lever subjected to the various loads as shown in Figure 1.0 with proper reasoning. Also determine a suitable diameter of the critical section on the lever assuming a FOS of 2.5 on tensile strength and a ratio of outside to inside diameter of 2. All dimensions are in mm. [10]

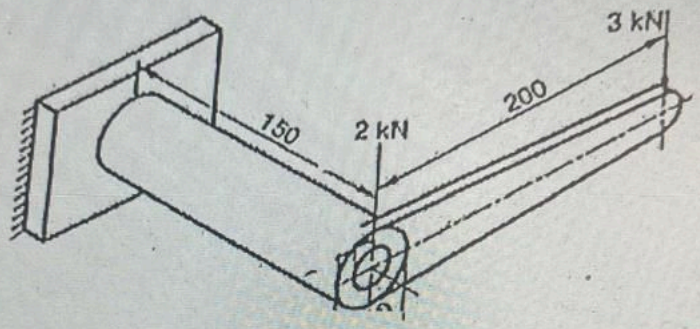

Figure 1.0

8

Total No. of Pages: 01 *Roll No. .....*

B. Tech.

SIXTH SEMESTER [AE]

END TERM EXAMINATION **May-2023**

AE302 DESIGN OF MACHINE ELEMENTS

Time: 3 Hours **Max. Marks: 40**

Note: Attempt any *FIVE* questions.
All questions carry equal marks.
Assume suitable missing data, if any.
Use of Design Data Handbook is permitted.

1. (a) Explain the term 'Endurance limit' of a material. Explain the factors which affect the endurance limit of a material. [CO#1] [4]

   (b) Explain the different types of fits with the help of neat sketches. [CO#2] [4]

2. Design a quadruple riveted (zigzag type) double strap butt joint with unequal straps for joining 25 mm thick medium carbon steel plates. [CO#3] [8]

3. Design a bushed-pin type flexible coupling for connecting two shafts 75 mm in diameter running at 1500 rpm while transmitting 25 kW. [CO#4] [8]

4. Design a power screw of 60 kN capacity for a maximum lift of 375 mm. The ground clearance should be as small as possible. [CO#5] [8]

5. Design a pair of cast teeth helical gears with 20° full depth system to transmit 75 kW at 1200 rpm of the pinion with a velocity ratio of 2.5. [CO#6] [8]

6. Design a differential band brake having an operating lever 225 m long. The ends of the brake band are attached so that their operating arms are 40 mm and 130 mm long. The brake drum diameter is 0.6 m and the arc of contact is 310°. The coefficient of friction may be taken as 0.2. [CO#7] [8]

P05 · AE302 · May2023

Total No. of Pages: 01 Roll No. 17

SIXTH SEMESTER [AE]

B. Tech.

END TERM EXAMINATION May 2024

AE 302 DESIGN OF MACHINE ELEMENTS

Time: 3 Hours Max. Marks: 40

Note: Attempt any *FIVE* questions.
All questions carry equal marks.
Assume suitable missing data, if any.
Use of Design Data Handbook is permitted.

1.(a) What are the basic requirements for designing machine elements? [CO#1] 4

(b) Differentiate between Goodman's and Soderberg's analysis for fluctuating loads. [CO#2] 4

2. Design a knuckle joint for connecting two medium carbon steel rods to withstand a tensile load of 250 kN. The permissible stresses in tension, shear and crushing are 180 MPa, 100 MPa and 220 MPa respectively. [CO#3] 8

3. A line shaft is to transmit 30 kW at 160 rpm. It is driven by a motor placed below it by means of a belt running at 45° to the vertical on a 1000 mm diameter pulley keyed to the end of the shaft. The tension on the tight side of the belt is 2.5 times that on the slack side and the center of the pulley overhangs 150 mm beyond the center line of the end bearing. Design the shaft if the allowable shear stress is 55 N/mm^2 and the weight of the pulley is 1.6 kN. [CO#4] 8

4. Design completely a close-coiled helical spring to carry a fluctuating load varying between 500 N and 1000 N. The spring index may be taken as 6 and the factor of safety should be 1.5. [CO#5] 8

5. Design a pair of cut-teeth spur gears with 20° full depth teeth to be made of high carbon steel. The gears are to transmit 50 kW at 2500 rpm of the pinion with a velocity ratio of 1.5. [CO#6] 8

6. Design a friction clutch with hardened steel clutch plates of inner and outer friction surface diameters of 50 mm and 75 mm respectively. The clutch is to transmit 6 kW at 800 rpm in oil atmosphere. [CO#7] 8

P06 · AE302 · May2024

Total no. of pages: 3 Roll No. _____

~~8th~~ SEMESTER – VI

B. Tech. (AE)

END SEMESTER EXAMINATION July 2021

AE-311 Design of Machine Elements

Time: 3 Hour Max. Marks: 70

Note: Attempt any 5 questions. Each carry equal marks. Assume missing data , if any

Q-1 (a) It is required to standardise 11 speeds from 72 rpm to 720 rpm for a machine tool. Specify the speeds. [6]

(b) A pair of spur gear of 20° pressure angle consist of 24 teeth pinion mesh with 49 teeth gear. Module= 3 mm; face width= 40 mm; Ultimate tensile stress for gears material= 600 MPa and surface hardness= 500 BHN. Pinion rotation= 1450 rpm, service factor= 1.75, FOS= 1.5

Determine rated power that the gears can transmit. [8]

Q-2 A line shaft supporting two pulleys A and B is shown in Fig-1. Power is supplied to the shaft by means of a vertical belt on pulley A, which is then transmitted to pulley B carrying a horizontal belt. The ratio of belt tensions on tight and loose sides is 4:1. The maximum tension in belt is limited to 4 kN. The pulleys are keyed to the shaft. Determine the diameter of the shaft according to A.S.M.E code if it is subjected to gradually applied load. [14]

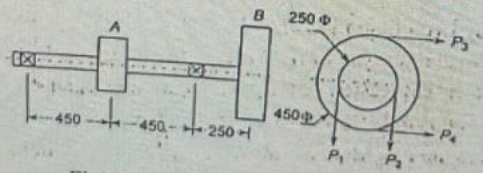

Fig.-1 (All dimensions are in mm)

1/3

Q-3 (a) Determine the diameter of rivets for a riveted joint subjected to an eccentric force of 75 kN as shown in Fig.-2. Assume that all the rivets are identical. [7]

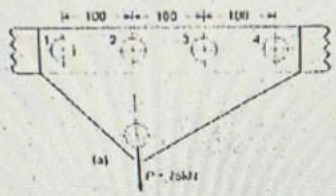

Fig. 2 (All dimensions are in mm)

(b) A rectangular cross-section is welded to a support by means of fillet welds as shown in Fig.-3. Determine the size of the weld. [7].

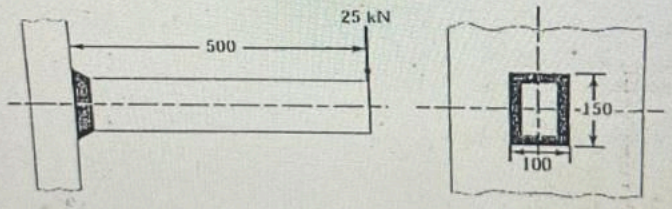

Fig.-3 (All dimensions are in mm)

Q-4 A centrifugal clutch has driving member consisting of a spider carrying four shoes which are kept from contact with the clutch by means of flat springs until increase of centrifugal force overcomes the resistance of the springs and the power is transmitted by the friction between the shoes and the case, Determine the necessary mass and size of each shoes if 22.5KW is to be transmitted at 750rpm with engagement beginning at 75% of the running speed. The inside diameter of the drum is 300mm and the radial distance of the centre of gravity of each shoes from the shaft axis is 125mm assume μ=0.25. [14]

Page 19 / 53

P07 · AE311 · Jul2021 · p2

Q-5 A bracket in the form of a plate is fitted to a column by means of four rivets A, B, C, and D as shown in Fig.-4. E is the midpoint of BC. A load of 100 kN is applied at a horizontal distance of 150 mm from E. Determine the diameter of rivet and width of the plate. [14]

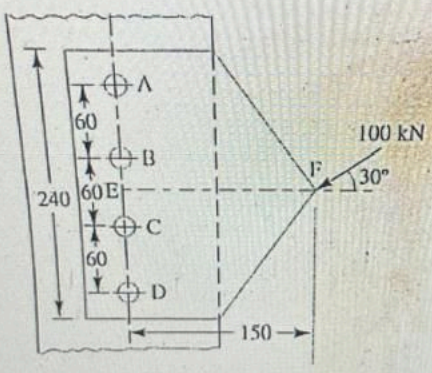

Fig.-4 (All dimensions are in mm)

Q-6 Design a bushed pin type flexible coupling to connect a pump shaft to a motor shaft. Transmitting 32 kW at 960 rpm. The overall torque is 20 % more than the mean torque. Draw the neat sketch of the coupling. [14]

Page 20 / 53

P07 · AE311 · Jul2021 · p3

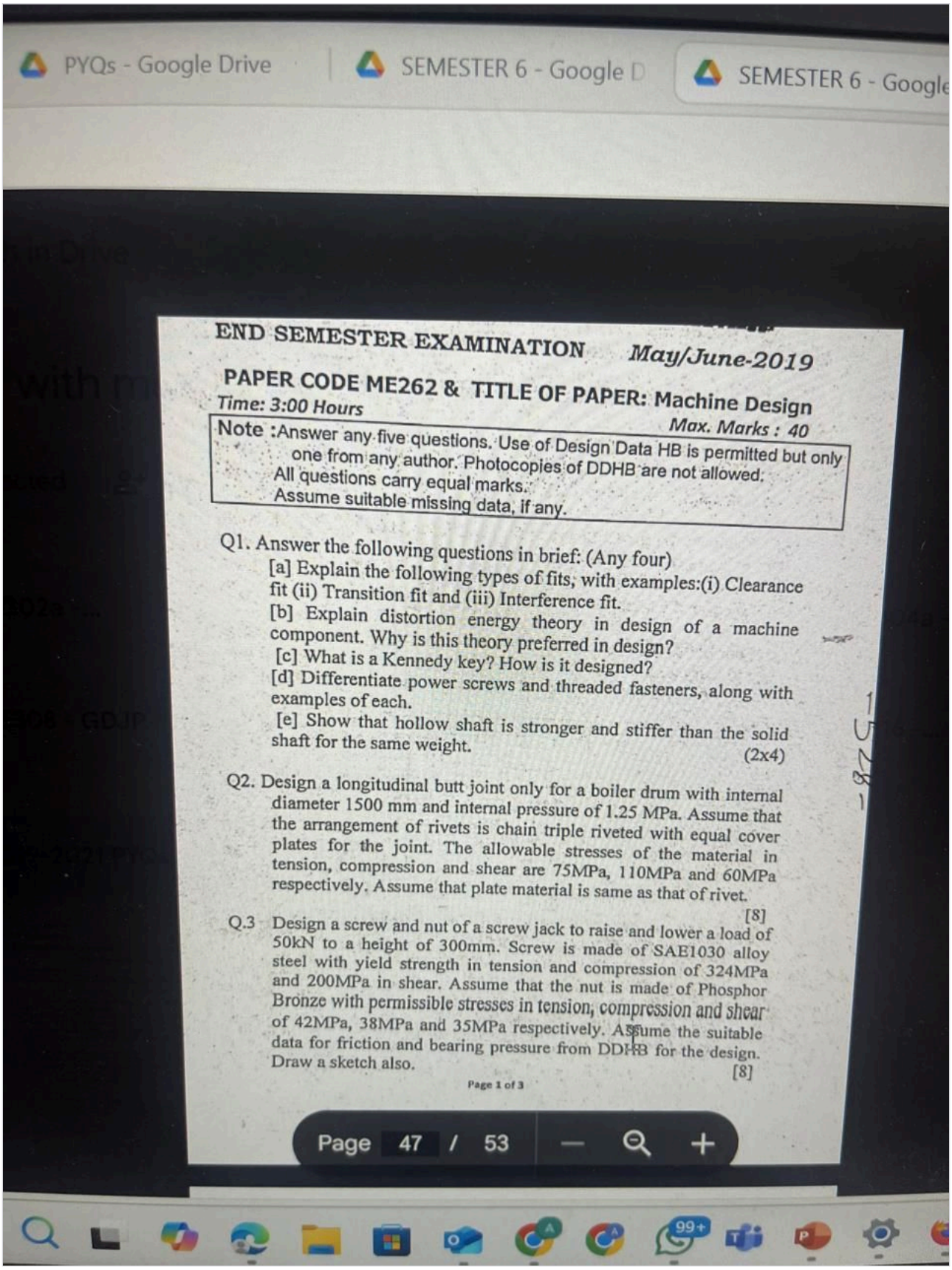

P08 · ME262 · Jun2019 · p1

Qs - Google Drive | SEMESTER 6 - Google D | SEMESTER 6 - Google D

Q.4 A machine shaft is supported in bearing placed at a distance of 750 mm. The shaft carries a Ø450 mm diameter pulley at a distance of 200 mm on right side of right hand bearing, and a spur gear Ø 200 mm diameter at a distance of 250 mm on the right of left hand bearing, 15 kW power is supplied to spur (with 20° pressure angle) at 600 rpm and taken off at pulley on which belt is mounted directly below it. The ratio of belt tensions is 3:1. The gear meshes with pinion located directly above the shaft. Given UTS for shaft = 500 MPa and YS = 310 MPa. Use ASME code of shaft design and assume Km and Kt as 1.25. [8]

Q.5 Design a simple Cotter joint for an axial load of 100kN in tension. Assume that all the parts are made of same material with permissible stresses of 70MPa, 50MPa and 90MPa in tension, shear and compression respectively. [8]

Q.6 Four bolts (as shown in Figure) are to be designed for a rigid bracket to carry a load of 12kN. Assume that maximum shear stress in the bolt in shank area is approx. 40MPa. All dimensions are in mm. [8]

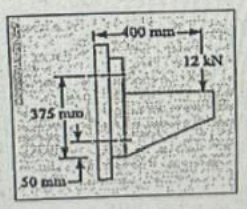

Q.7 A motor shaft rotating at 1440 rpm has to transmit 25 hp to a low speed shaft with a speed reduction of 3:1. The teeth of spur gears are 20° full depth involutes, with 18 teeth on pinion. Both pinion and gear are made of same material with permissible bending stress of 138MPa. Design the gears from stand point of strength, dynamic load and wear. Select material data from DDHB. Assume a Velocity factor (Cv) =3/(3 + v) , where v being the pitch line velocity in m/s.

Page 2 of 3

Page 48 / 53

P08 · ME262 · Jun2019 · p2

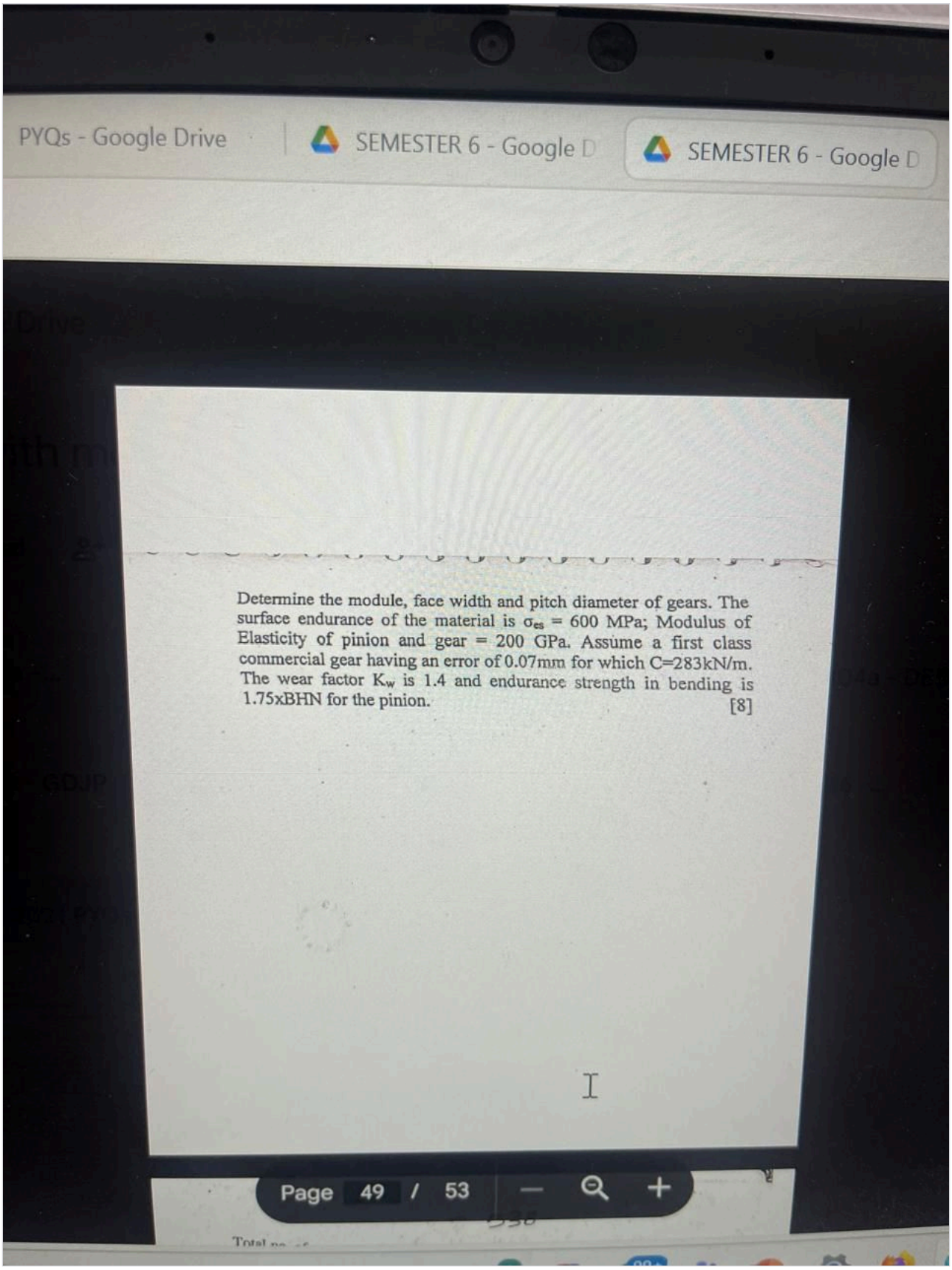

P08 · ME262 · Jun2019 · p3

Total No. of Pages: 02 359 Roll No. .....

B. Tech.

FOURTH SEMESTER [PE]

END TERM EXAMINATION May-2023

ME262 MACHINE DESIGN

Time: 3 Hours Max. Marks: 40

Note: Attempt any *FIVE* questions.
All questions carry equal marks.
Assume suitable missing data, if any.
Use of Design Data Handbook is permitted.

1. (a) Explain the phenomenon of stress concentration. How is it caused and how can it be reduced? [CO#1] [4]
(b) Explain the unilateral and bilateral systems of tolerance. [CO#2] [4]

2. (a) How do you consider the initial tightening load when external forces are acting on a bolt? [CO#3] [3]
(b) A 0.3125 m x 0.325 m diesel engine running at 320 rpm has a compression pressure of 2.25 N/mm^2 and a maximum explosion pressure of 3.8 N/mm^2. The head is held in place by eight M14 x 2c bolts arrange on a 0.4 m bolt circle. A thin asbestos gasket is used. Determine the stresses induced in the bolt due to (i) applied load and (ii) tightening. [CO#3] [5]

3. A countershaft made of cold-rolled steel transmits 40 kW at 320 rpm and is supported on bearings 1.5 m apart. It carries two pulleys mounted upon it. One pulley is 0.45 m in diameter and is located 0.38 m to the right of left hand bearing and it receives power in a horizontal direction from a pulley at its right. The second pulley 0.635 m in diameter is located 0.45 m to the left of the right hand bearing and delivers power in a vertical direction to a machine below it. Design the shaft and compare the stress developed in the shaft with the design stress as obtained from the code. [CO#4] [8]

360

4. Design completely a close-coiled helical spring to absorb 500 Nm of energy whose mean diameter of coils is 8 times the wire diameter. The initial compression of the spring is 50 mm and the additional compression is 100 mm while absorbing the shock. [CO#5] [8]

5. Design a pair of cast teeth helical gears for transmitting 25 kW at 1800 rpm of the driver gear and 600 rpm of the driven gear. The helix angle is 30° and the profile is corresponding to 20° full-depth system. The driven gear has 24 teeth and the overhang of each gear is 150 mm. [CO#6] [8]

6. Design a friction clutch with hardened steel clutch plates of inner and outer friction surface diameters of 50 mm and 75 mm respectively. The clutch is to transmit 4 kW at 825 rpm in oil atmosphere. [CO#7] [8]

B. Tech. (ME)

End Semester Examination (May -2019)

ME-313 MACHINE DESIGN -I

Time: 3 hrs *Max. Marks: 70*

Note: Attempt any FIVE questions. Assume suitable missing data, if any. Use of Design data hand book is permitted.

(1) (a) Draw Goodman diagram, Soderberg line and Gerber parabola. Explain it briefly. [5]

(b) Define the term 'stress concentration factor', notch sensitivity and fatique. [5]

(c) Explain the bending failure of the cotter. [4]

(2) Design a spigot-socket cotter joint for an axial load of 80kN in tension and compression. It is assumed that all parts are made of the same material with the permissible stress of 70MPa,50MPa, and 90Mpa in tension, shear and compression respectively. Also, sketch the joints. [14]

(3) Design a triple riveted double strap butt joint with unequal covers for, longitudinal joint, a boiler shell having a 1.5m internal diameter to withstand maximum pressure 2.5N/mm^2. Assume that shell plate and rivets are made of C-20 steel having following allowable stresses, σ_t=86N/mm^2 ,τ=52 N/mm^2 and σ_c=129N/mm^2. [14]

(4) A solid shaft is subjected to a twisting moment of 800N-m, a bending moment 0f 200N-m. If the maximum allowable values of normal and shear stresses are 140N/mm^2 and 80N/mm^2 respectively, determine the diameter of the shaft. [14]

(5) Design a helical spring used in an engine for the given data.
Length of spring when the valve is open=40mm
Length of spring when the valve is closed=50mm
Spring load when the valve is open=400N
Spring load when the valve is closed=200N
Maximum inside dia of spring=28mm
Maximum permissible shearing stress=400Mpa
Modulus of rigidity=80GPa [14]

P10 · ME313 · May2019 · p1

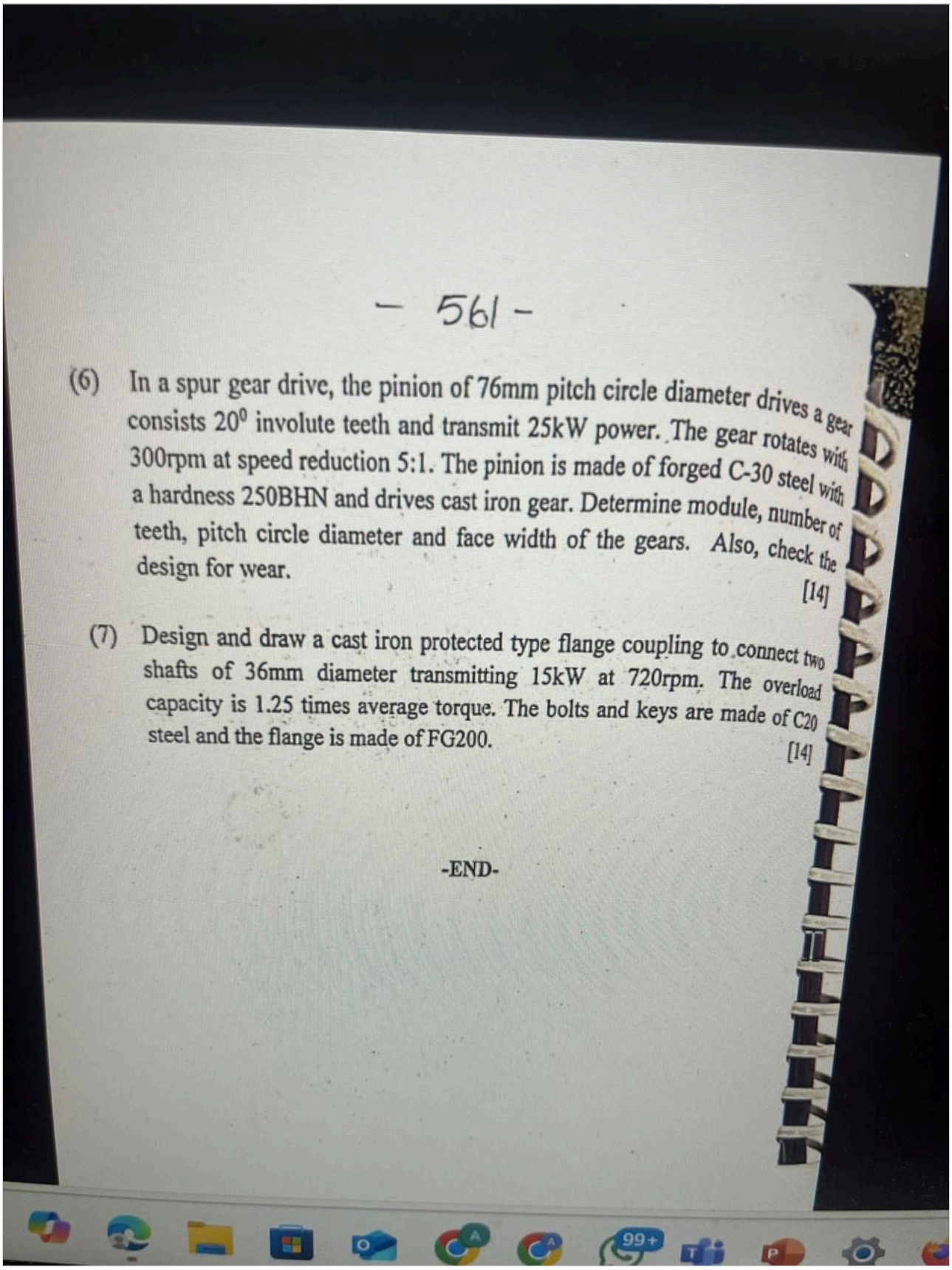

(6) In a spur gear drive, the pinion of 76mm pitch circle diameter drives a gear consists 20^0 involute teeth and transmit 25kW power. The gear rotates with 300rpm at speed reduction 5:1. The pinion is made of forged C-30 steel with a hardness 250BHN and drives cast iron gear. Determine module, number of teeth, pitch circle diameter and face width of the gears. Also, check the design for wear. [14]

(7) Design and draw a cast iron protected type flange coupling to connect two shafts of 36mm diameter transmitting 15kW at 720rpm. The overload capacity is 1.25 times average torque. The bolts and keys are made of C20 steel and the flange is made of FG200. [14]

-END-

P10 · ME313 · May2019 · p2

Time: 3 hrs Max. Marks: 70

Note: Attempt any FIVE questions. Assume suitable missing data, if any. Use of design data handbook is permitted.

1) (a) Draw Goodman diagram, Soderberg line, and Gerber parabola. Explain it briefly. [5]

(b) Define the term 'stress concentration factor,' notch sensitivity, and fatigue. [5]

(c) Explain the bending failure of the cotter. [4]

2) Design a spigot-socket cotter joint for an axial load of 90kN in tension and compression. It is assumed that all parts are made of the same material with the permissible stress of 70MPa, 40MPa, and 100Mpa in tension, shear and compression, respectively. Also, sketch the joints. [14]

3) Design a triple-riveted double strap butt joint with unequal covers for, longitudinal joint, a boiler shell having a 1.5m internal diameter to withstand maximum pressure 2.4N/mm^2. Assume that shell plate and rivets are made of C-20 steel having the following allowable stresses, σ_t=80N/mm^2,τ=50 N/mm^2, and σ_c=120N/mm^2. [14]

4) A solid shaft is subjected to a twisting moment of 600N-m, a bending moment 0f 300N-m. If the maximum allowable values of normal and shear stresses are 140N/mm^2 and 80N/mm^2, respectively, determine the diameter of the shaft. [14]

5) Design a helical spring used in an engine for the given data.
Length of spring when the valve is open=40mm
Length of spring when the valve is closed=50mm
Spring load when the valve is open=400N
Spring load when the valve is closed=200N
Maximum inside dia of spring=28mm
Maximum permissible shearing stress=400Mpa
Modulus of rigidity=80GPa [14]

P11 · ME313 · other · p1

ogle Drive | SEMESTER 6 - Google D | SEMESTER 6 - Google

(6) It is required to design a pair of spur gears with 20^0 full-depth involute teeth based on the Lewis equation. The velocity factor is to be used to account for dynamic load. The pinion shaft is connected to a 10kW, 1440 rpm motor. The starting torque of the motor is 150% of the rated torque. The speed reduction is 4:1. The pinion as well as the gear is made of plain carbon steel 40C8 (S_{ut}=600N/mm^2). The factor of safety can be taken as 1.5. Design the gears, specify their dimensions and suggests suitable surface hardness for the gears. [14]

(7) Design and draw a cast iron protected type flange coupling to connect two shafts of 36mm diameter transmitting 15kW at 720rpm. The overload capacity is 1.25 times the average torque. The bolts and keys are made of C20 steel, and the flange is made of FG200. [14]

-END-

Page 25 / 53

P11 · ME313 · other · p2

Total No. of Pages: 02 625 Roll No. .....

B. Tech. (ME) Seventh Semester

End Semester Examination (Nov-2024)

CME-403 MACHINE DESIGN

Time: 3 hrs Max. Marks: 40

Note: Attempt **any FIVE** questions. Assume suitable missing data, if any. Use of Design data hand book is permitted.

(1) (a) What are factors that govern selection of materials while designing a machine component. [2] [CO2] [BTL1,2]

(b) Define preferred numbers. [2] [CO2] [BTL1,2]

(c) What are unilateral and bilateral tolerances? [2] [CO2] [BTL31,2]

(d) Write and explain different parts of screw Jack. [2] [CO4] [BTL1,2]

(2)(a) Explain the failure of cotter in bending. Also, write related equations. [2] [CO1] [BTL1,3,4]

(b) Draw Goodman diagram, Soderberg line, and Gerber parabola. Explain briefly and write related equations. [2] [CO3] [BTL1,2]

(c) A shaft of diameter d is subjected to a torque T and a bending moment M. Find expressions for an equivalent bending moment and equivalent torque. [2] [CO3] [BTL3]

(d) Explain failure of square key in shear and crushing. Also, write related equations. [2] [CO3] [BTL3]

(3) Design a spigot-socket cotter joint for an axial load of 80kN in tension and compression. It is assumed that all parts are made of the same material with the permissible stress of 70MPa,50MPa, and 90Mpa in tension, shear and compression respectively. Also, sketch the joints. [8] [CO1] [BTL1,2,3]

(4) Design a triple riveted double strap butt joint with unequal covers for, longitudinal joint. The boiler shell having a 1.25m internal diameter to withstand maximum pressure 2.5N/mm^2. Assume that shell plate and rivets are made of C20 steel having following allowable stresses, σ_t=86N/mm^2 ,τ=52 N/mm^2 and σ_c=129N/mm^2 . Also, sketch the joints. [8] [CO4] [BTL2,3,5]

Page 1 of 2

626

(5) A solid shaft is subjected to a twisting moment of 800N-m, a bending mome
of 200N-m. If the maximum allowable values of normal and shear stresses a
140N/mm² and 80N/mm² respectively, determine the diameter of the shaft.
[8] [CO4] [BTL2,3,

(6) A motor shaft rotating at1500 rpm to transmit 15kw power to a low-speed sha
rotating at 500rpm. A 20⁰ pressure angle involute tooth gear pinion is use
The pinion has 25 teeth. Both gear and pinion are made of cast iron having t
allowable strength of 55N/mm².Design a spur gear on static strength and che
it on wear criteria. The allowable surface endurance strength is 500N/mm
[8] [CO5] [BTL2,3

(7) Design and draw a cast iron protected type flange coupling to connect t
shafts of 36mm diameter (made of steel 40C8, FOS=2.5) transmitting 15k
at 720rpm. The overload capacity is 1.25 times average torque. The bolts a
keys are made of 30C8 steel (Yield strength=400N/mm², FOS=2.5) and
flange is made of FG200(ultimate strength=200N/mm², FOS=6).
[8] [CO5] [BTL2,3,

-END-